Model Name : Olvia_BE
Compal Project Name : A4W1E
File Name : LA-C801P

Compal Confidential

A4W1E Schematics Document

AMD "Beema" Platform

AMD 15W APU With Puma+ Core

LA-C801P REV: 1.A

2015-03-30

Compal Confidential

Model Name : A4W1E

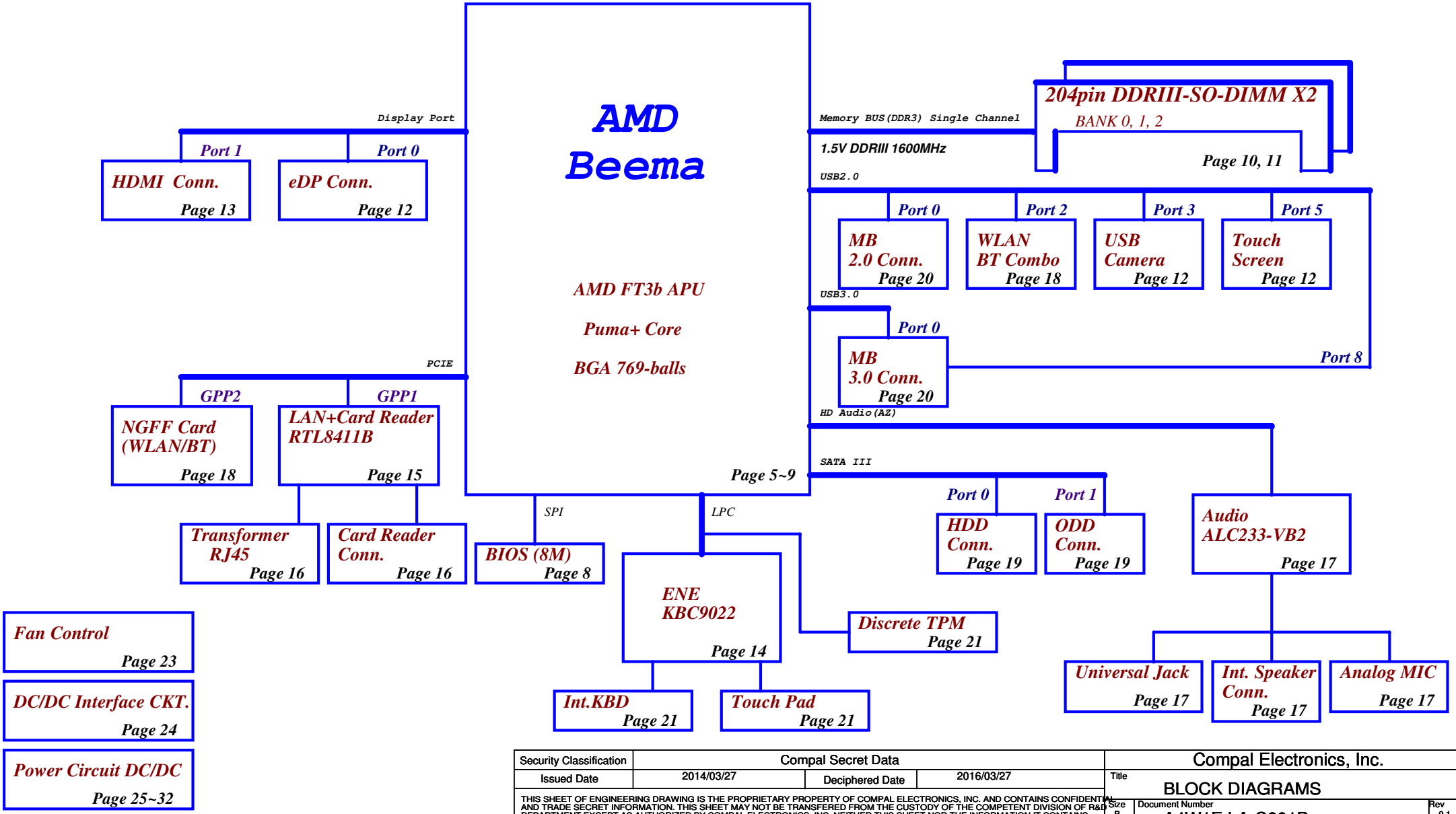

Security Classification	Compal Secret Data		
Issued Date	2014/03/27	Deciphered Date	2016/03/27

THIS SHEET OF ENGINEERING DRAWING IS THE PROPRIETARY PROPERTY OF COMPAL ELECTRONICS, INC. AND CONTAINS CONFIDENTIAL AND TRADE SECRET INFORMATION. THIS SHEET MAY NOT BE TRANSFERED FROM THE CUSTODY OF THE COMPETENT DIVISION OF R&D DEPARTMENT EXCEPT AS AUTHORIZED BY COMPAL ELECTRONICS, INC. NEITHER THIS SHEET NOR THE INFORMATION IT CONTAINS MAY BE USED BY OR DISCLOSED TO ANY THIRD PARTY WITHOUT PRIOR WRITTEN CONSENT OF COMPAL ELECTRONICS, INC.

Compal Electronics, Inc.

Title: BLOCK DIAGRAMS

Size: B | Document Number: A4W1E LA-C801P | Rev: 0.1

Date: Wednesday, March 04, 2015 | Sheet 2 of 34

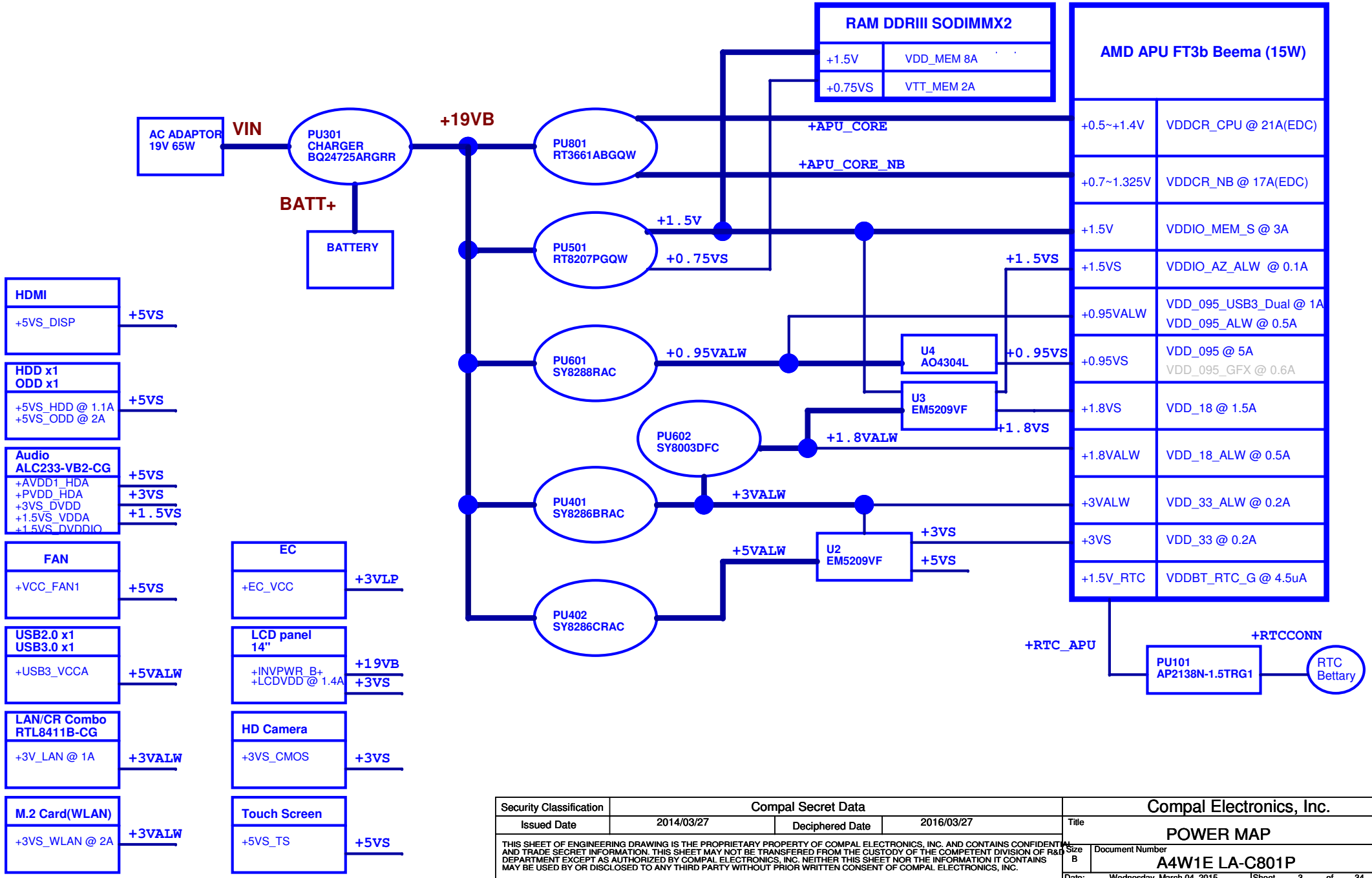

Security Classification	Compal Secret Data		
Issued Date	2014/03/27	Deciphered Date	2016/03/27

THIS SHEET OF ENGINEERING DRAWING IS THE PROPRIETARY PROPERTY OF COMPAL ELECTRONICS, INC. AND CONTAINS CONFIDENTIAL AND TRADE SECRET INFORMATION. THIS SHEET MAY NOT BE TRANSFERED FROM THE CUSTODY OF THE COMPETENT DIVISION OF R&D DEPARTMENT EXCEPT AS AUTHORIZED BY COMPAL ELECTRONICS, INC. NEITHER THIS SHEET NOR THE INFORMATION IT CONTAINS MAY BE USED BY OR DISCLOSED TO ANY THIRD PARTY WITHOUT PRIOR WRITTEN CONSENT OF COMPAL ELECTRONICS, INC.

Compal Electronics, Inc.

Title: POWER MAP

Size: B | Document Number: A4W1E LA-C801P | Rev: 1.0

Date: Wednesday, March 04, 2015 | Sheet 3 of 34

Voltage Rails

Power Plane	Description	S0	S3	S5
VIN	Adapter power supply (19V)	ON	ON	ON
B+	AC or battery power rail for power circuit.	ON	ON	ON
+APU_CORE	Core voltage for APU	ON	OFF	OFF
+APU_CORE_NB	Voltage for On-die VGA of APU	ON	OFF	OFF
+0.95VALW	0.95V always on power rail	ON	ON	ON
+0.95VS	0.95V switched power rail	ON	OFF	OFF
+1.8VALW	1.8V always on power rail	ON	ON	ON
+1.8VS	1.8V switched power rail	ON	OFF	OFF
+1.5V	1.5V power rail for APU and DDR	ON	ON	OFF
+1.5VS	1.5V switched power rail	ON	OFF	OFF
+0.75VS	0.75V switched power rail for DDR terminator	ON	OFF	OFF
+3VALW	3.3V always on power rail	ON	ON	ON
+3VS	3.3V switched power rail	ON	OFF	OFF
+5VALW	5V always on power rail	ON	ON	ON
+5VS	5V switched power rail	ON	OFF	OFF
+RTC_APU	RTC power	ON	ON	ON

Board ID / SKU ID Table for AD channel

Vcc	3.3V				
Ra	100K +/-1%				
Board ID	Rb	V min	V typ	V max	EC AD
0	0		0.000V	0.300V	0x00 - 0x0B
1	12K +/-1%	0.347V	0.354V	0.360V	0x0C - 0x1C
2	15K +/-1%	0.423V	0.430V	0.438V	0x1D - 0x26
3	20K +/-1%	0.541V	0.550V	0.559V	0x27 - 0x30
4	27K +/-1%	0.691V	0.702V	0.713V	0x31 - 0x3B
5	33K +/-1%	0.807V	0.819V	0.831V	0x3C - 0x46
6	43K +/-1%	0.978V	0.992V	1.006V	0x47 - 0x54
7	56K +/-1%	1.169V	1.185V	1.200V	0x55 - 0x64
8	75K +/-1%	1.398V	1.414V	1.430V	0x65 - 0x76
9	100K +/-1%	1.634V	1.650V	1.667V	0x77 - 0x87
10	130K +/-1%	1.849V	1.865V	1.881V	0x88 - 0x96
11	160K +/-1%	2.015V	2.031V	2.046V	0x97 - 0xA3
12	200K +/-1%	2.185V	2.200V	2.215V	0xA4 - 0xAD
13	240K +/-1%	2.316V	2.329V	2.343V	0xAE - 0xB7
14	270K +/-1%	2.395V	2.408V	2.421V	0xB8 - 0xC0
15	330K +/-1%	2.521V	2.533V	2.544V	0xC1 - 0xC9
16	430K +/-1%	2.667V	2.677V	2.687V	0xCA - 0xD3
17	560K +/-1%	2.791V	2.800V	2.808V	0xD4 - 0xDC
18	750K +/-1%	2.905V	2.912V	2.919V	0xDD - 0xE6
19	NC	3.000V	3.300V		0xE7 - 0xFF

BOARD ID Table

Board ID	PCB Revision
0	EVT
1	DVT
2	PVT
3*	Pre-MP
4	
5	
6	
7	

SMBus List

EC SMBus Port1 (+3VALW)			EC SMBus Port2 (+3VS)		
Device	Address	HEX	Device	Address	HEX
Smart Battery	0001 011X b	16H	SB-TSI (APU)	1001 100X b	98H

APU SMBus Port0 (+3VS)			APU SMBus Port1(+3VALW)		
Device	Address	HEX	Device	Address	HEX
DDR DIMM1	1010 000Xb	A0H			
DDR DIMM2	1010 001Xb	A2H			

BOM Structure Table

BOM Structure	BTO Item
@	Unpop
CONN@	Connector part control by ME
EMI@	EMI pop component
@EMI@	EMI unpop component
ESD@	ESD pop component
@ESD@	ESD unpop component
EMC@	EMI pop component
@EMC@	EMI unpop component
JP@	Jump
TP@	Test point
SP@	Short pad for clear CMOS
HDT@	HDT+ for test phase, MP remove
RS@	R-short
45@	HDMI royalty
9012@	Use KBC9012
9022@	Use KBC9022
A8@,A6@,A4@	APU Part Number for A4,A6,A8 APU
E1@,E2@	APU Part Number for E1,E2 APU
BL@	Keyboard backlight
TPM@	Use discrete TPM module
TPUSB@	Use USB to I2C IC for T/P
ECI2C@	Use EC I2C T/P
@RF@	RF unpop component
233@	Use for Audio Codec ALC233-VB2
KBN@	Stuff when use Kabini APU
BMA@	Stuff when use Beema APU
CZL@	Stuff when use Carrizo-L APU
BYOC@	Stuff when support BYOC
NBYOC@	Stuff when non-support BYOC

STATE \ SIGNAL	SLP_S3#	SLP_S5#	+VALW	+V	+VS	Clock
Full ON	HIGH	HIGH	ON	ON	ON	ON
S1(Power On Suspend)	HIGH	HIGH	ON	ON	ON	LOW
S3 (Suspend to RAM)	LOW	HIGH	ON	ON	OFF	OFF
S4 (Suspend to Disk)	LOW	HIGH	ON	OFF	OFF	OFF
S5 (Soft OFF)	LOW	LOW	ON	OFF	OFF	OFF

APU POWER SEQUENCE

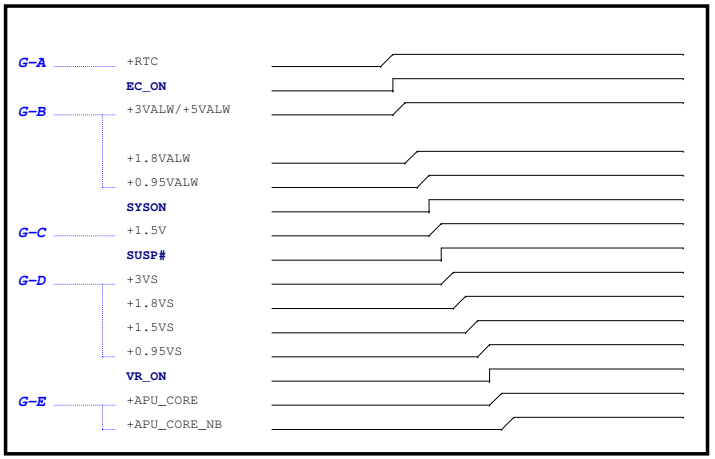

ZZZ
A4W1E Pre MP
PCB
Part Number = DA6001E301A
PCB 1FE LA-C801P REV1A M/B

ZZZ
HDMI_ROYALTY
ROYALTY HDMI W/LOGO+HDCP
RO0000003HM
45@

UAPU1 A6@
APU
Part Number = SA00007R920
S IC A6-6310 AM6310ITJ44JB 1.8G BGA 769P

UAPU1 E1@
APU
Part Number = SA00007RC20
S IC E1-6010 EM6010IUJ23JB 1.35G BGA769P

UAPU1 E2@
APU
Part Number = SA00007RB20
S IC E2-6110 EM6110ITJ44JB 1.5G BGA 769P

U44 9022@
EC
Part Number = SA000075S30
S IC KB9022QD LQFP 128P EC CONTROLLER

UAPU1 A8@
APU
Part Number = SA00007TQ80
S IC A8-6410 AM6410ITJ44JB 2G BGA 769P

UAPU1 A4@
APU
Part Number = SA00007RA20
S IC A4-6210 AM6210ITJ44JB 1.8G BGA 769P

re check

Security Classification	Compal Secret Data		
Issued Date	2014/03/27	Deciphered Date	2016/03/27

THIS SHEET OF ENGINEERING DRAWING IS THE PROPRIETARY PROPERTY OF COMPAL ELECTRONICS, INC. AND CONTAINS CONFIDENTIAL AND TRADE SECRET INFORMATION. THIS SHEET MAY NOT BE TRANSFERED FROM THE CUSTODY OF THE COMPETENT DIVISION OF R&D DEPARTMENT EXCEPT AS AUTHORIZED BY COMPAL ELECTRONICS, INC. NEITHER THIS SHEET NOR THE INFORMATION IT CONTAINS MAY BE USED BY OR DISCLOSED TO ANY THIRD PARTY WITHOUT PRIOR WRITTEN CONSENT OF COMPAL ELECTRONICS, INC.

Compal Electronics, Inc.

Title: NOTES LIST

Size: B | Document Number: A4W1E LA-C801P | Rev: 1.0

Date: Monday, March 30, 2015 | Sheet 4 of 34

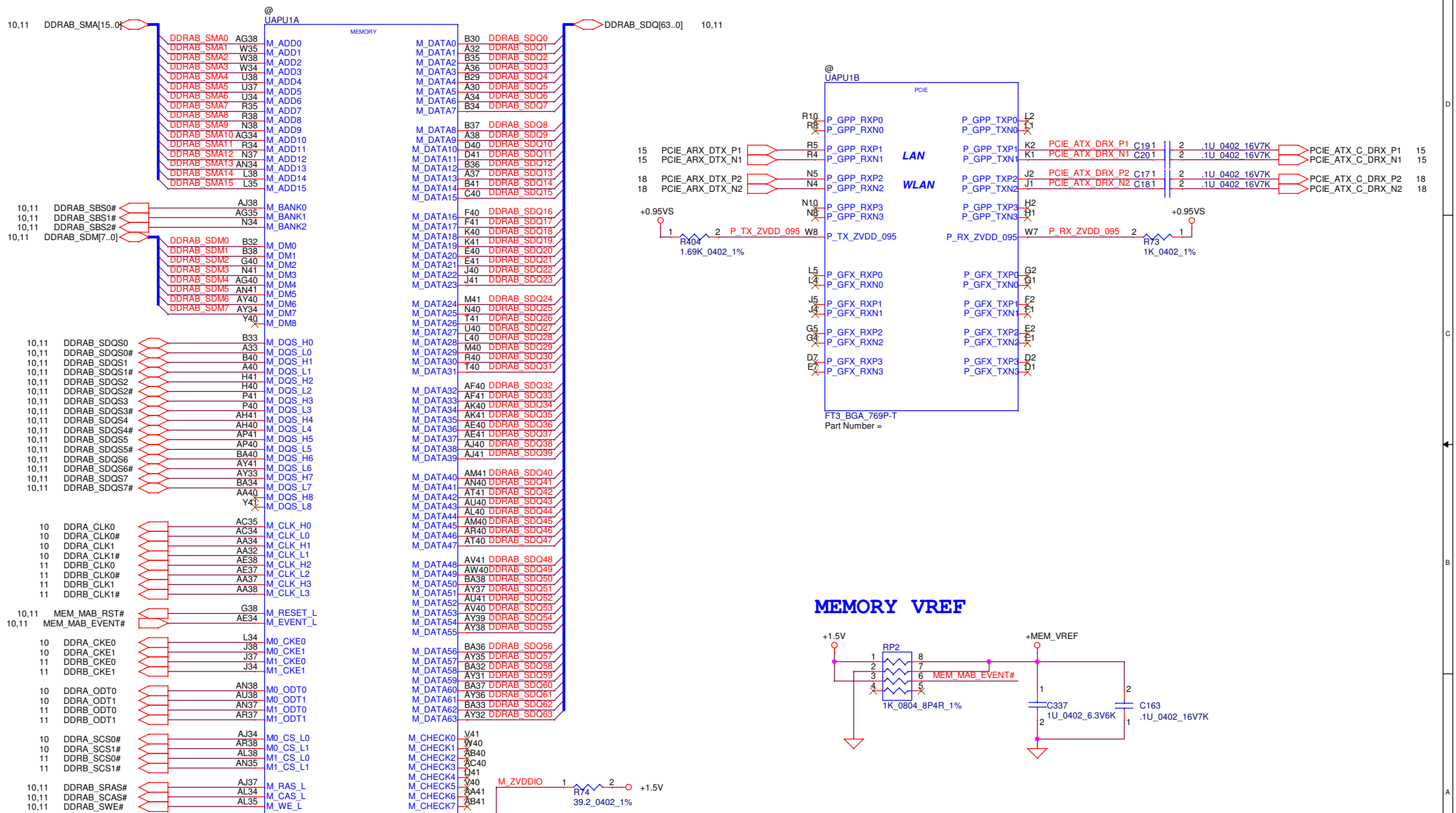

Security Classification	Compal Secret Data		
Issued Date	2014/03/27	Deciphered Date	2016/03/27

THIS SHEET OF ENGINEERING DRAWING IS THE PROPRIETARY PROPERTY OF COMPAL ELECTRONICS, INC. AND CONTAINS CONFIDENTIAL AND TRADE SECRET INFORMATION. THIS SHEET MAY NOT BE TRANSFERED FROM THE CUSTODY OF THE COMPETENT DIVISION OF R&D DEPARTMENT EXCEPT AS AUTHORIZED BY COMPAL ELECTRONICS, INC. NEITHER THIS SHEET NOR THE INFORMATION IT CONTAINS MAY BE USED BY OR DISCLOSED TO ANY THIRD PARTY WITHOUT PRIOR WRITTEN CONSENT OF COMPAL ELECTRONICS, INC.

Compal Electronics, Inc.

Title: P05-FT3 MEMORY INTERFACE/PCIE

Size: B | Document Number: A4W1E LA-C801P | Rev: 1.0

Date: Wednesday, March 04, 2015 | Sheet 5 of 34

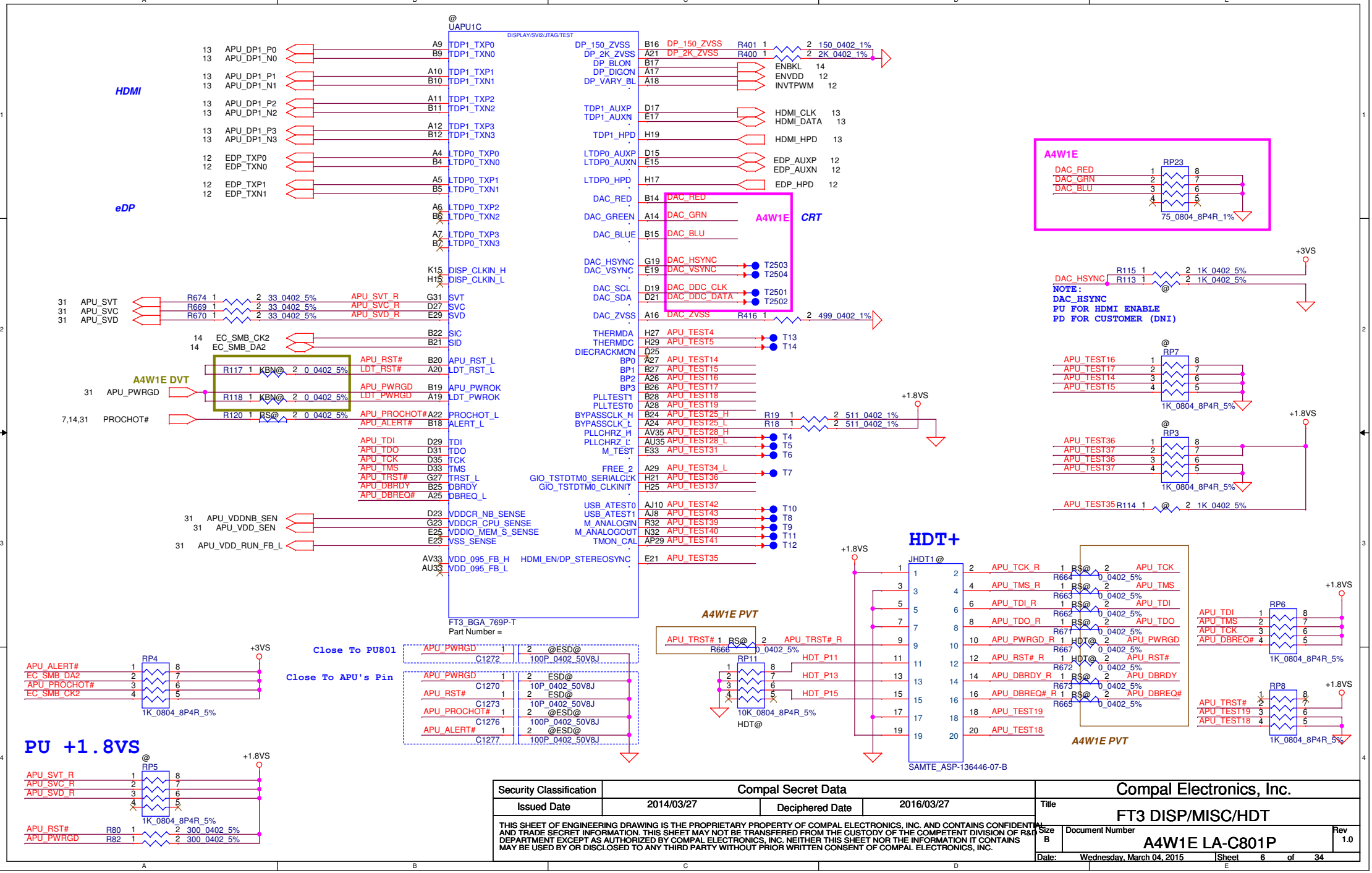

Security Classification	Compal Secret Data		
Issued Date	2014/03/27	Deciphered Date	2016/03/27

THIS SHEET OF ENGINEERING DRAWING IS THE PROPRIETARY PROPERTY OF COMPAL ELECTRONICS, INC. AND CONTAINS CONFIDENTIAL AND TRADE SECRET INFORMATION. THIS SHEET MAY NOT BE TRANSFERED FROM THE CUSTODY OF THE COMPETENT DIVISION OF R&D DEPARTMENT EXCEPT AS AUTHORIZED BY COMPAL ELECTRONICS, INC. NEITHER THIS SHEET NOR THE INFORMATION IT CONTAINS MAY BE USED BY OR DISCLOSED TO ANY THIRD PARTY WITHOUT PRIOR WRITTEN CONSENT OF COMPAL ELECTRONICS, INC.

Compal Electronics, Inc.

Title: FT3 DISP/MISC/HDT

Size: B | Document Number: A4W1E LA-C801P | Rev: 1.0

Date: Wednesday, March 04, 2015 | Sheet 6 of 34

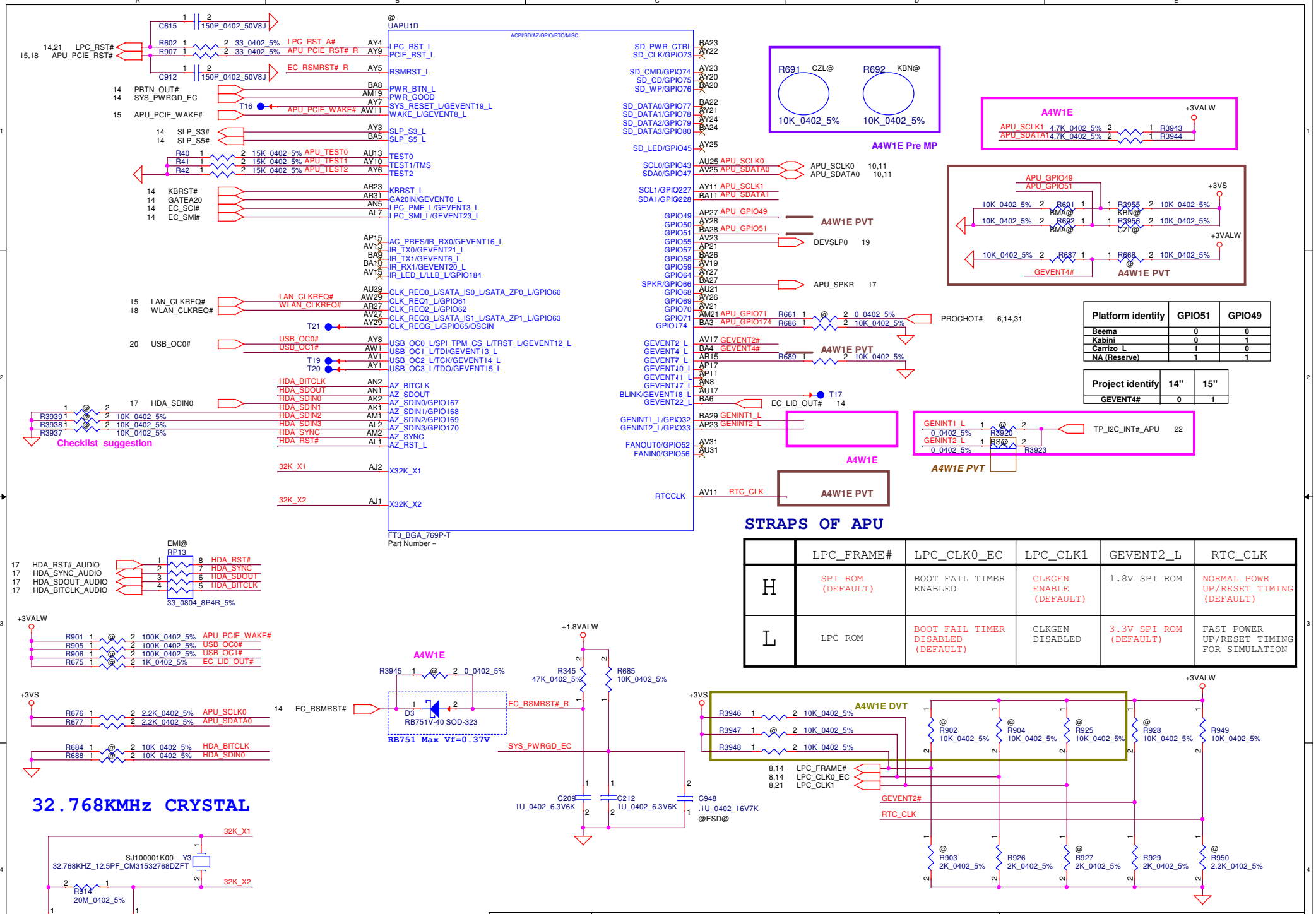

Platform identify	GPIO51	GPIO49
Beema	0	0
Kabini	0	1
Carrizo_L	1	0
NA (Reserve)	1	1

Project identify	14"	15"
GEVENT4#	0	1

STRAPS OF APU

	LPC_FRAME#	LPC_CLK0_EC	LPC_CLK1	GEVENT2_L	RTC_CLK
H	SPI ROM (DEFAULT)	BOOT FAIL TIMER ENABLED	CLKGEN ENABLE (DEFAULT)	1.8V SPI ROM	NORMAL POWR UP/RESET TIMING (DEFAULT)
L	LPC ROM	BOOT FAIL TIMER DISABLED (DEFAULT)	CLKGEN DISABLED	3.3V SPI ROM (DEFAULT)	FAST POWER UP/RESET TIMING FOR SIMULATION

THIS SHEET OF ENGINEERING DRAWING IS THE PROPRIETARY PROPERTY OF COMPAL ELECTRONICS, INC. AND CONTAINS CONFIDENTIAL AND TRADE SECRET INFORMATION. THIS SHEET MAY NOT BE TRANSFERED FROM THE CUSTODY OF THE COMPETENT DIVISION OF R&D DEPARTMENT EXCEPT AS AUTHORIZED BY COMPAL ELECTRONICS, INC. NEITHER THIS SHEET NOR THE INFORMATION IT CONTAINS MAY BE USED BY OR DISCLOSED TO ANY THIRD PARTY WITHOUT PRIOR WRITTEN CONSENT OF COMPAL ELECTRONICS, INC.

Security Classification	Compal Secret Data		
Issued Date	2014/03/27	Deciphered Date	2016/03/27

Compal Electronics, Inc.

Title: FT3 GPIO/AZ/MISC/STRAPS

Size: Custom | Document Number: A4W1E LA-C801P | Rev: 1.0

Date: Monday, March 30, 2015 | Sheet 7 of 34

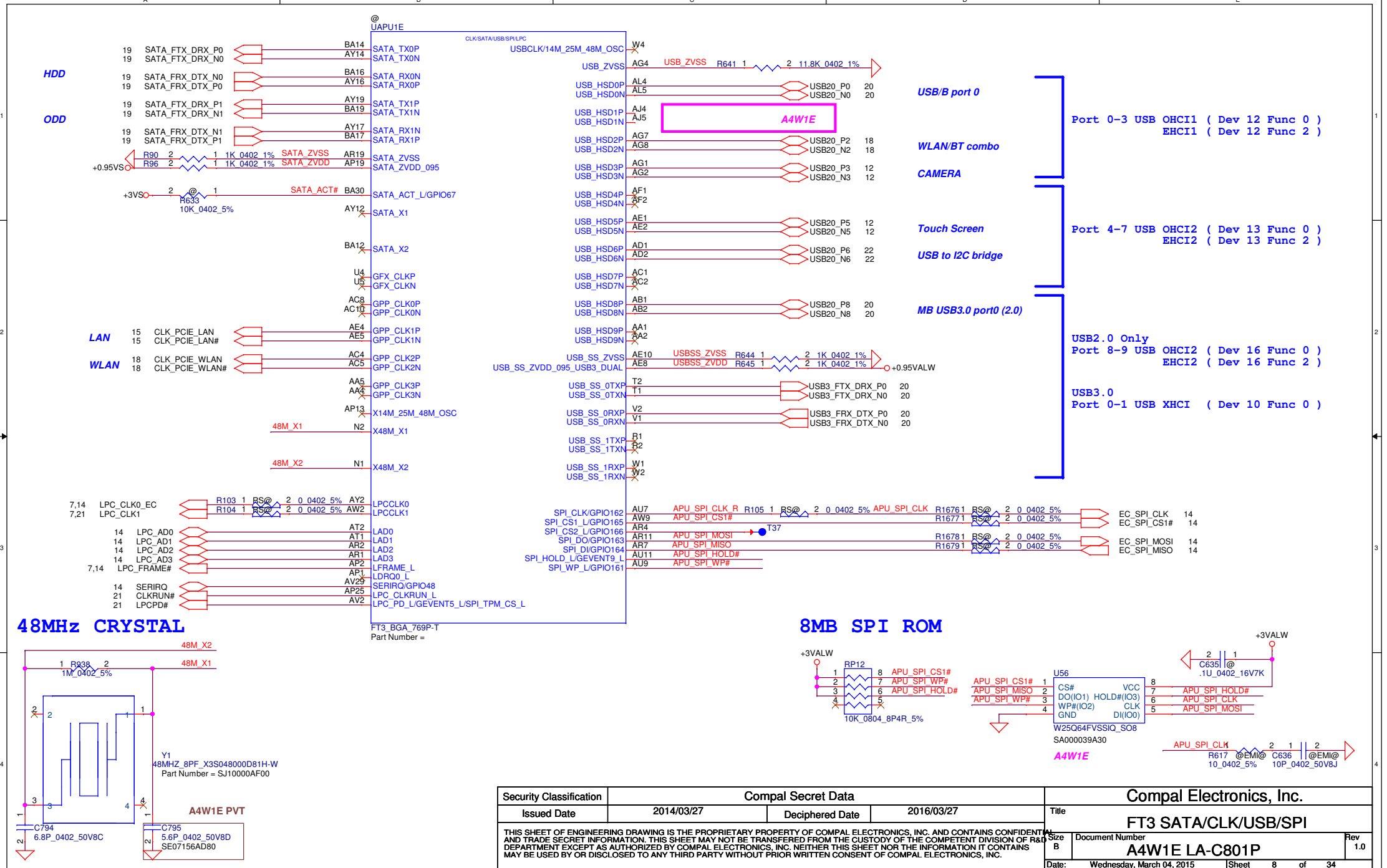

Security Classification	Compal Secret Data		
Issued Date	2014/03/27	Deciphered Date	2016/03/27

THIS SHEET OF ENGINEERING DRAWING IS THE PROPRIETARY PROPERTY OF COMPAL ELECTRONICS, INC. AND CONTAINS CONFIDENTIAL AND TRADE SECRET INFORMATION. THIS SHEET MAY NOT BE TRANSFERED FROM THE CUSTODY OF THE COMPETENT DIVISION OF R&D DEPARTMENT EXCEPT AS AUTHORIZED BY COMPAL ELECTRONICS, INC. NEITHER THIS SHEET NOR THE INFORMATION IT CONTAINS MAY BE USED BY OR DISCLOSED TO ANY THIRD PARTY WITHOUT PRIOR WRITTEN CONSENT OF COMPAL ELECTRONICS, INC.

Compal Electronics, Inc.

Title: FT3 SATA/CLK/USB/SPI

Size: B | Document Number: A4W1E LA-C801P | Rev: 1.0

Date: Wednesday, March 04, 2015 | Sheet 8 of 34

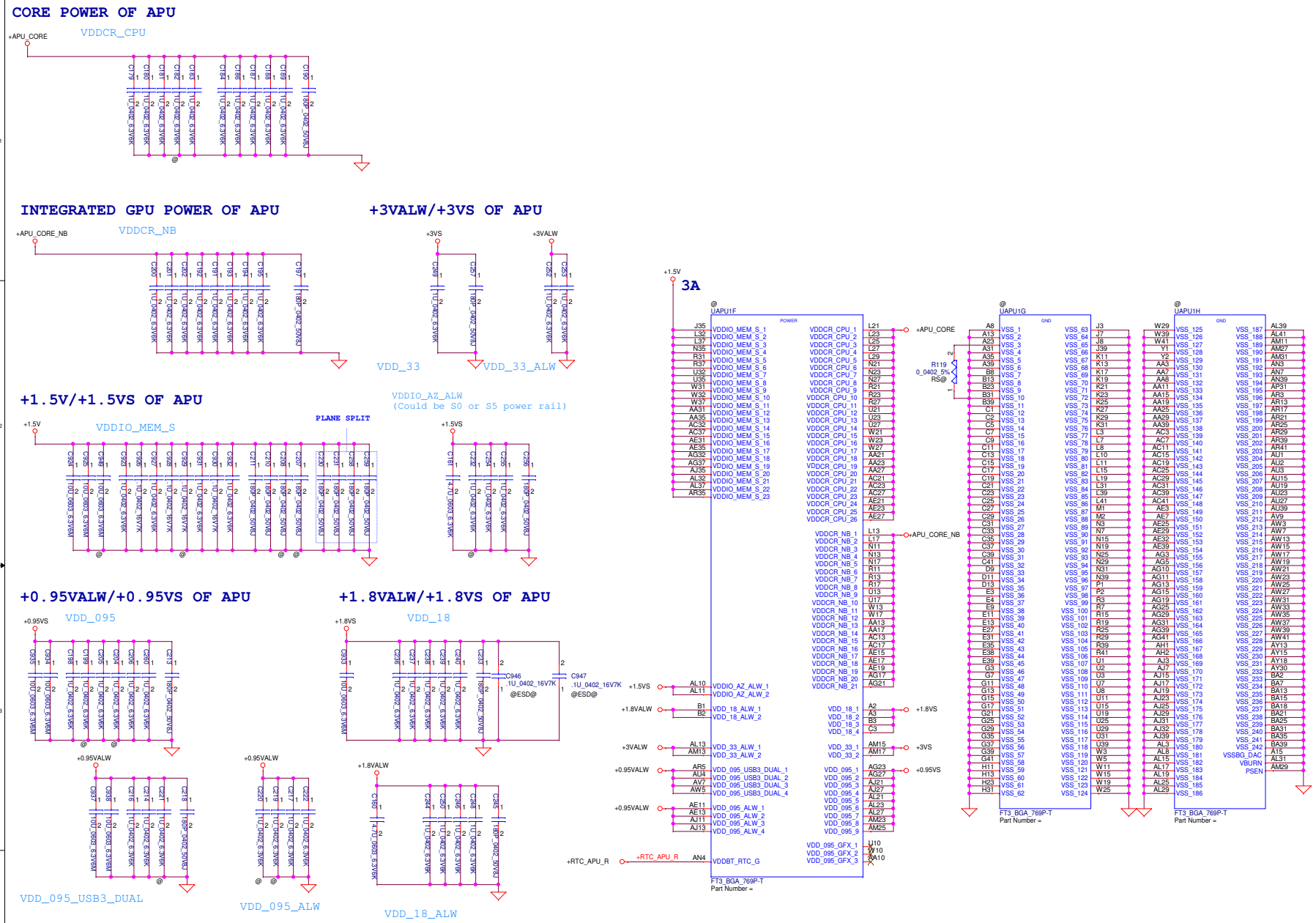

Security Classification	Compal Secret Data		
Issued Date	2014/03/27	Deciphered Date	2016/03/27

THIS SHEET OF ENGINEERING DRAWING IS THE PROPRIETARY PROPERTY OF COMPAL ELECTRONICS, INC. AND CONTAINS CONFIDENTIAL AND TRADE SECRET INFORMATION. THIS SHEET MAY NOT BE TRANSFERED FROM THE CUSTODY OF THE COMPETENT DIVISION OF R&D DEPARTMENT EXCEPT AS AUTHORIZED BY COMPAL ELECTRONICS, INC. NEITHER THIS SHEET NOR THE INFORMATION IT CONTAINS MAY BE USED BY OR DISCLOSED TO ANY THIRD PARTY WITHOUT PRIOR WRITTEN CONSENT OF COMPAL ELECTRONICS, INC.

Compal Electronics, Inc.

Title: FT3 PWR/GND

Size: C | Document Number: A4W1E LA-C801P | Rev: 1.0

Date: Wednesday, March 04, 2015 | Sheet 9 of 34

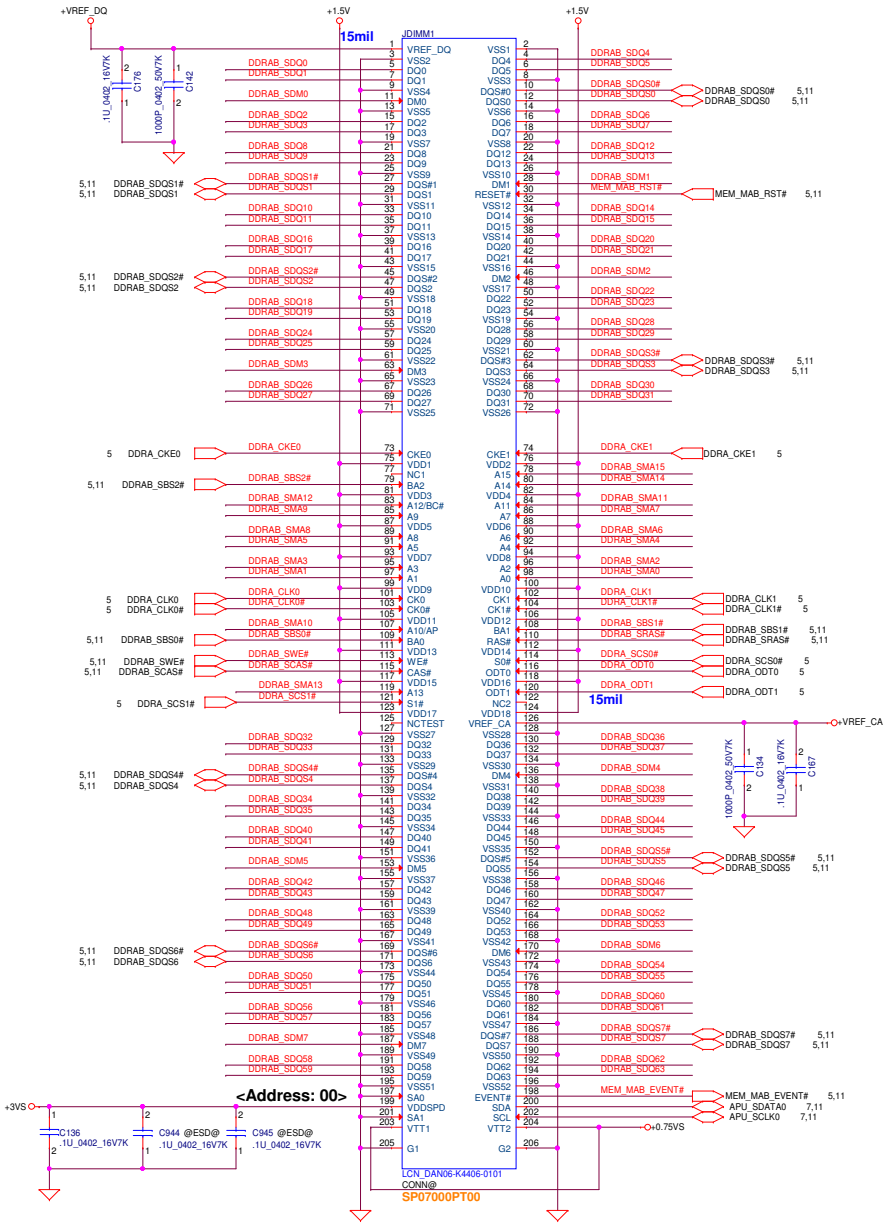

DIMM_A H:4mm RVS

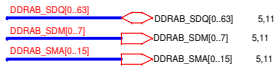

+1.5V/+0.75VS OF DIMM1

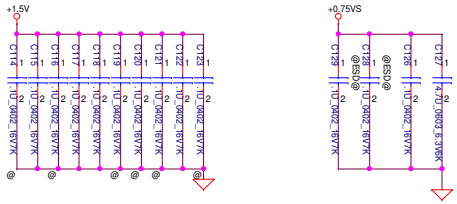

VREF for DIMM1,2

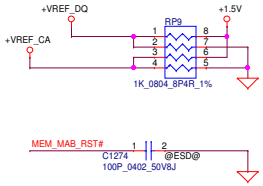

Security Classification	Compal Secret Data		
Issued Date	2014/03/27	Deciphered Date	2016/03/27

THIS SHEET OF ENGINEERING DRAWING IS THE PROPRIETARY PROPERTY OF COMPAL ELECTRONICS, INC. AND CONTAINS CONFIDENTIAL AND TRADE SECRET INFORMATION. THIS SHEET MAY NOT BE TRANSFERED FROM THE CUSTODY OF THE COMPETENT DIVISION OF R&D DEPARTMENT EXCEPT AS AUTHORIZED BY COMPAL ELECTRONICS, INC. NEITHER THIS SHEET NOR THE INFORMATION IT CONTAINS MAY BE USED BY OR DISCLOSED TO ANY THIRD PARTY WITHOUT PRIOR WRITTEN CONSENT OF COMPAL ELECTRONICS, INC.

Compal Electronics, Inc.

Title: DDR3 SODIMM-I Socket

Size: C | Document Number: A4W1E LA-C801P | Rev: 1.0

Date: Wednesday, March 04, 2015 | Sheet 10 of 34

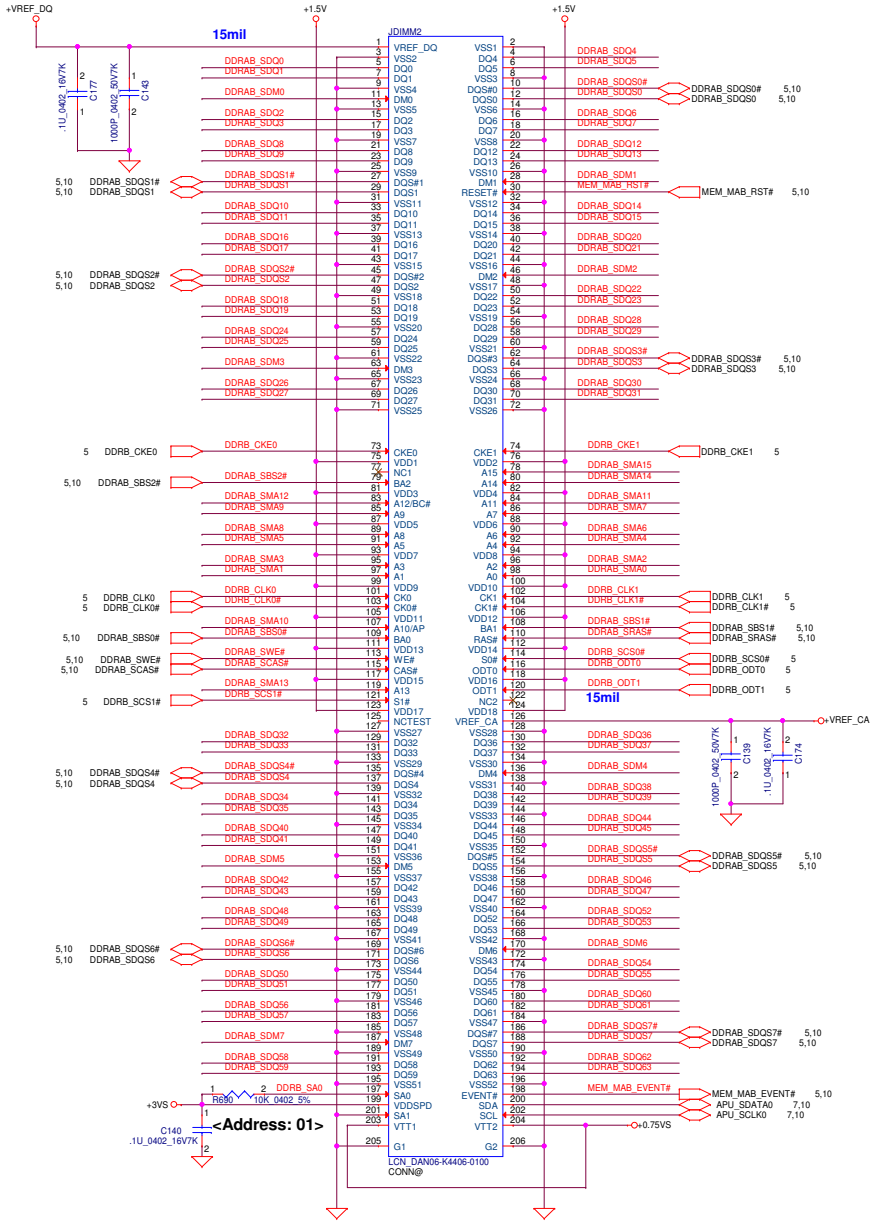

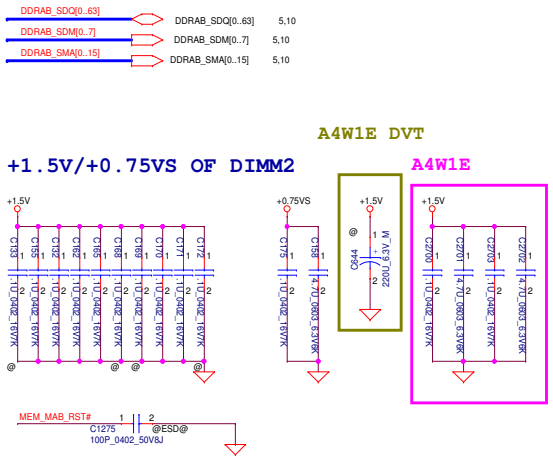

Security Classification	Compal Secret Data		
Issued Date	2014/03/27	Deciphered Date	2016/03/27

THIS SHEET OF ENGINEERING DRAWING IS THE PROPRIETARY PROPERTY OF COMPAL ELECTRONICS, INC. AND CONTAINS CONFIDENTIAL AND TRADE SECRET INFORMATION. THIS SHEET MAY NOT BE TRANSFERED FROM THE CUSTODY OF THE COMPETENT DIVISION OF R&D DEPARTMENT EXCEPT AS AUTHORIZED BY COMPAL ELECTRONICS, INC. NEITHER THIS SHEET NOR THE INFORMATION IT CONTAINS MAY BE USED BY OR DISCLOSED TO ANY THIRD PARTY WITHOUT PRIOR WRITTEN CONSENT OF COMPAL ELECTRONICS, INC.

Compal Electronics, Inc.

Title: DDR3 SODIMM-II Socket

Size: C | Document Number: A4W1E LA-C801P | Rev: 1.0

Date: Wednesday, March 04, 2015 | Sheet 11 of 34

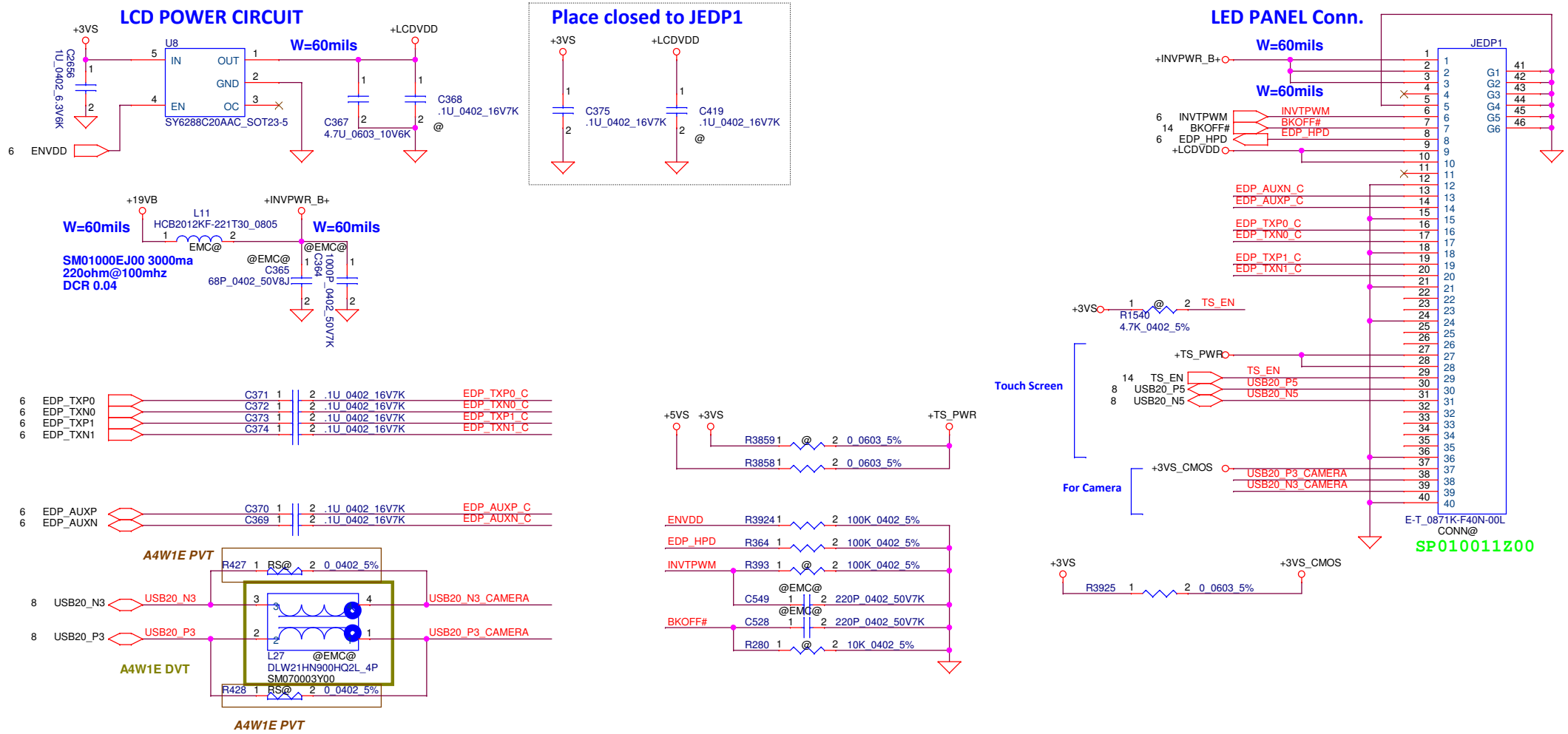

Security Classification	Compal Secret Data		
Issued Date	2014/11/04	Deciphered Date	2016/11/04

THIS SHEET OF ENGINEERING DRAWING IS THE PROPRIETARY PROPERTY OF COMPAL ELECTRONICS, INC. AND CONTAINS CONFIDENTIAL AND TRADE SECRET INFORMATION. THIS SHEET MAY NOT BE TRANSFERED FROM THE CUSTODY OF THE COMPETENT DIVISION OF R&D DEPARTMENT EXCEPT AS AUTHORIZED BY COMPAL ELECTRONICS, INC. NEITHER THIS SHEET NOR THE INFORMATION IT CONTAINS MAY BE USED BY OR DISCLOSED TO ANY THIRD PARTY WITHOUT PRIOR WRITTEN CONSENT OF COMPAL ELECTRONICS, INC.

Compal Electronics, Inc.

Title: eDP/Camera/Touch Screen

Size: Custom | Document Number: A4W1E LA-C801P | Rev: 0.1

Date: Monday, March 30, 2015 | Sheet 12 of 34

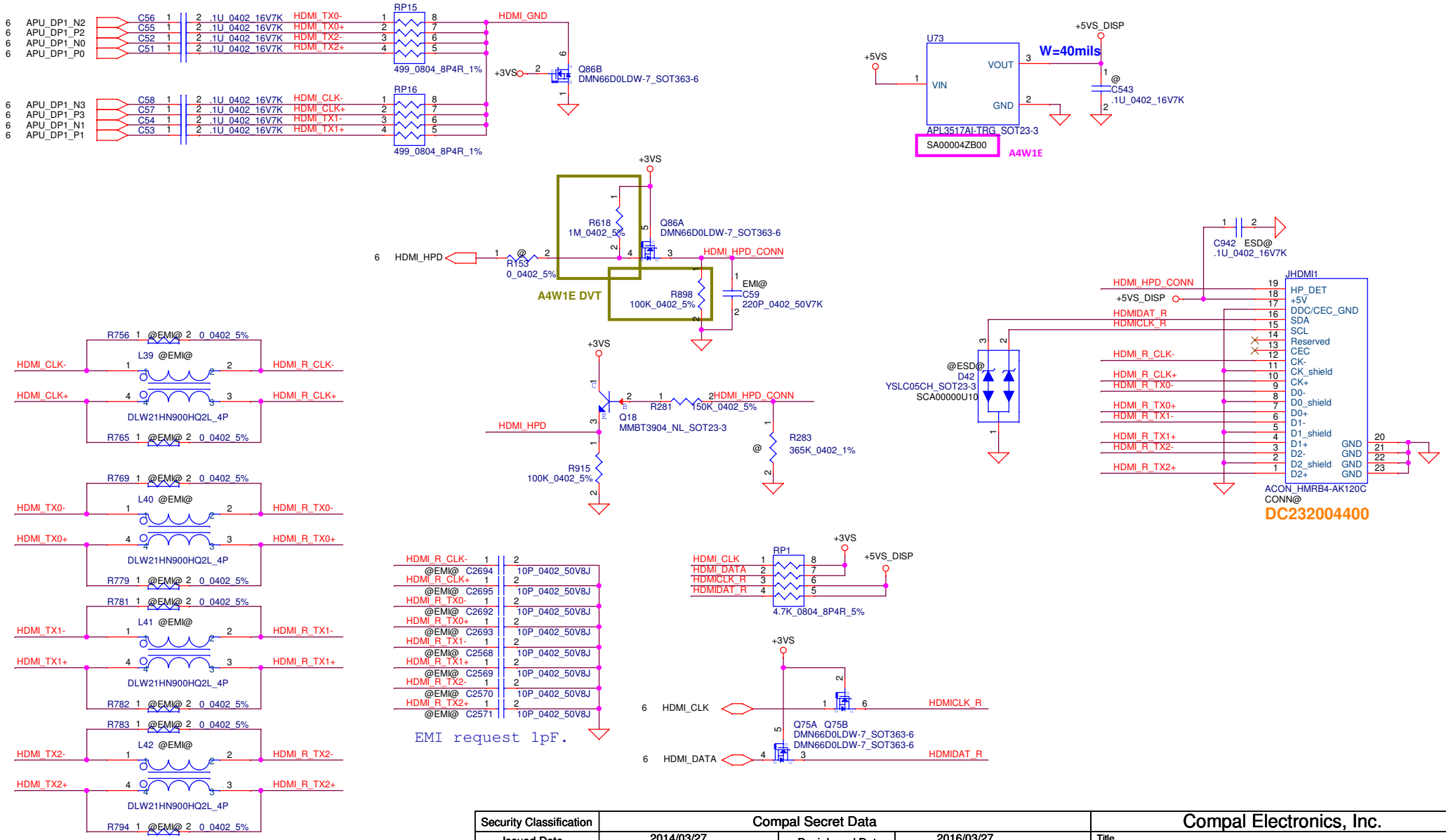

Security Classification	Compal Secret Data		
Issued Date	2014/03/27	Deciphered Date	2016/03/27

THIS SHEET OF ENGINEERING DRAWING IS THE PROPRIETARY PROPERTY OF COMPAL ELECTRONICS, INC. AND CONTAINS CONFIDENTIAL AND TRADE SECRET INFORMATION. THIS SHEET MAY NOT BE TRANSFERED FROM THE CUSTODY OF THE COMPETENT DIVISION OF R&D DEPARTMENT EXCEPT AS AUTHORIZED BY COMPAL ELECTRONICS, INC. NEITHER THIS SHEET NOR THE INFORMATION IT CONTAINS MAY BE USED BY OR DISCLOSED TO ANY THIRD PARTY WITHOUT PRIOR WRITTEN CONSENT OF COMPAL ELECTRONICS, INC.

Compal Electronics, Inc.

Title: HDMI CONN

Size: B | Document Number: A4W1E LA-C801P | Rev: 1.0

Date: Wednesday, March 04, 2015 | Sheet 13 of 34

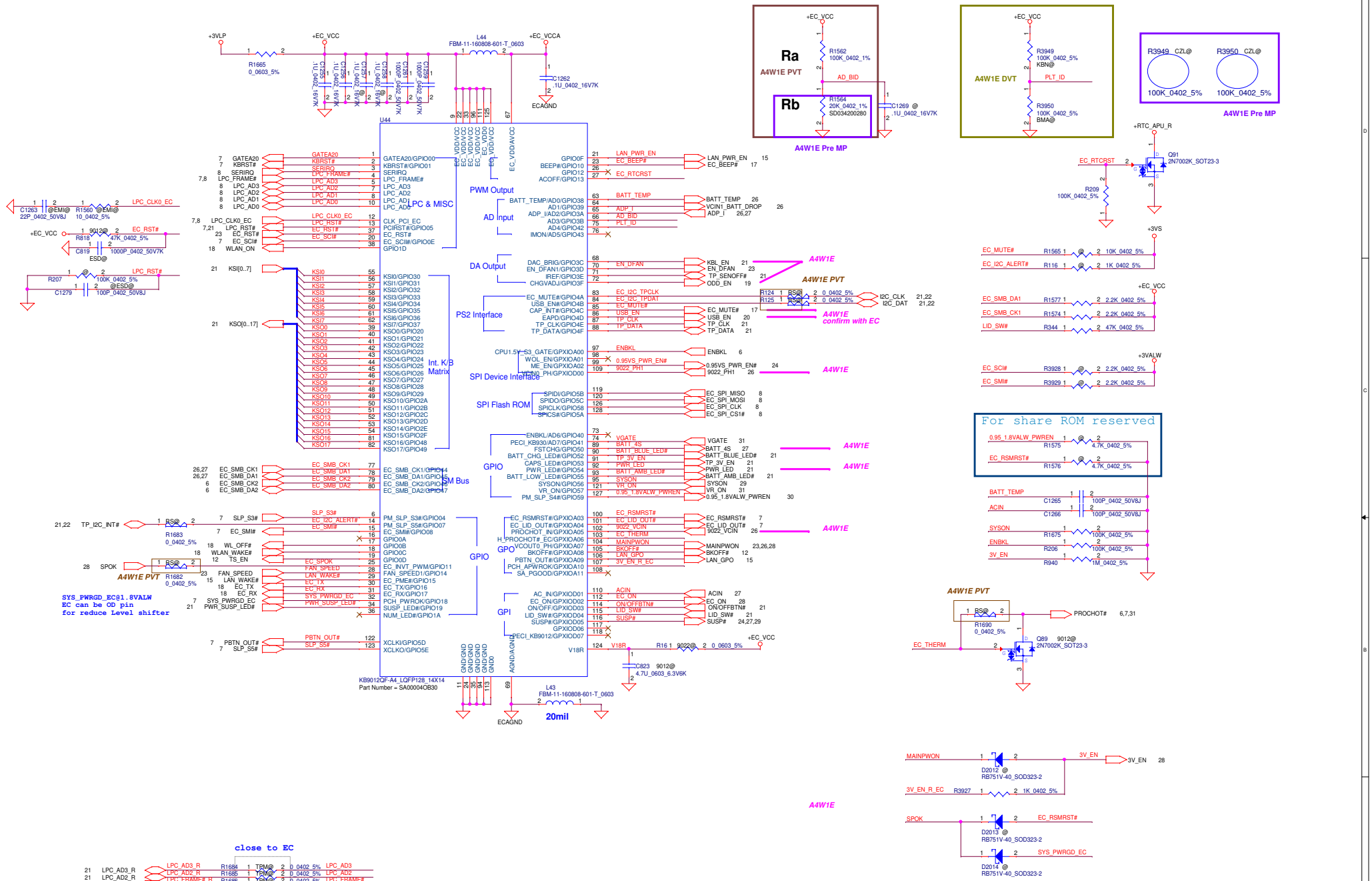

Security Classification	Compal Secret Data			Compal Electronics, Inc.
Issued Date	2014/03/27	Deciphered Date	2016/03/27	Title: EC ENE-KB9022
				Size: C; Document Number: A4W1E LA-C801P; Rev: 1.0
				Date: Monday, March 30, 2015; Sheet 14 of 34

THIS SHEET OF ENGINEERING DRAWING IS THE PROPRIETARY PROPERTY OF COMPAL ELECTRONICS, INC. AND CONTAINS CONFIDENTIAL AND TRADE SECRET INFORMATION. THIS SHEET MAY NOT BE TRANSFERED FROM THE CUSTODY OF THE COMPETENT DIVISION OF R&D DEPARTMENT EXCEPT AS AUTHORIZED BY COMPAL ELECTRONICS, INC. NEITHER THIS SHEET NOR THE INFORMATION IT CONTAINS MAY BE USED BY OR DISCLOSED TO ANY THIRD PARTY WITHOUT PRIOR WRITTEN CONSENT OF COMPAL ELECTRONICS, INC.

LAN-RTL8411B

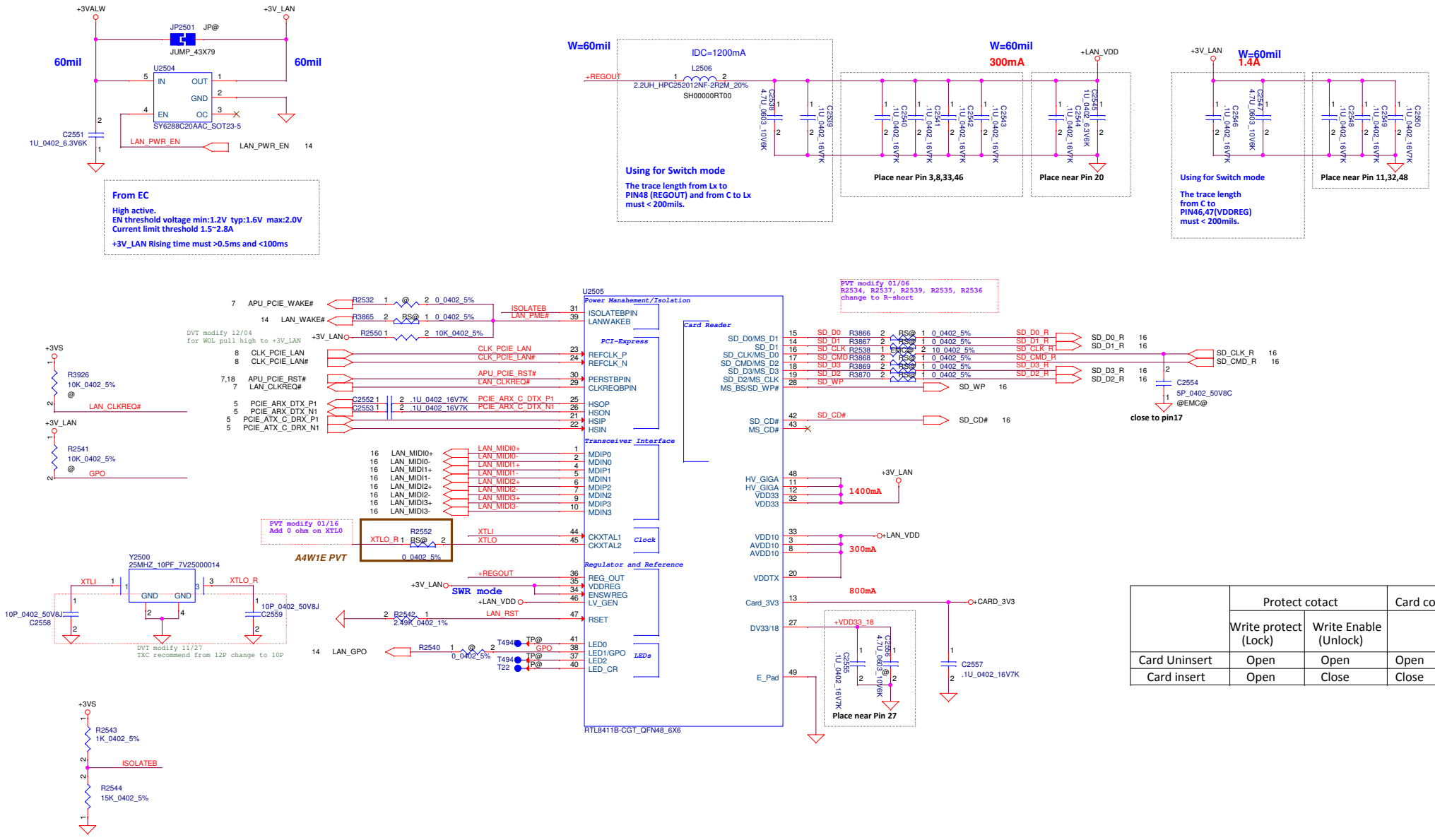

	Protect cotact		Card contact
	Write protect (Lock)	Write Enable (Unlock)	
Card Uninsert	Open	Open	Open
Card insert	Open	Close	Close

Security Classification	Compal Secret Data		
Issued Date	2014/11/04	Deciphered Date	2016/11/04

THIS SHEET OF ENGINEERING DRAWING IS THE PROPRIETARY PROPERTY OF COMPAL ELECTRONICS, INC. AND CONTAINS CONFIDENTIAL AND TRADE SECRET INFORMATION. THIS SHEET MAY NOT BE TRANSFERED FROM THE CUSTODY OF THE COMPETENT DIVISION OF R&D DEPARTMENT EXCEPT AS AUTHORIZED BY COMPAL ELECTRONICS, INC. NEITHER THIS SHEET NOR THE INFORMATION IT CONTAINS MAY BE USED BY OR DISCLOSED TO ANY THIRD PARTY WITHOUT PRIOR WRITTEN CONSENT OF COMPAL ELECTRONICS, INC.

Compal Electronics, Inc.

Title: LAN RTL8411-CG

Size: Custom | Document Number: A4W1E LA-C801P | Rev: 0.1

Date: Wednesday, March 04, 2015 | Sheet 15 of 34

LAN Connector

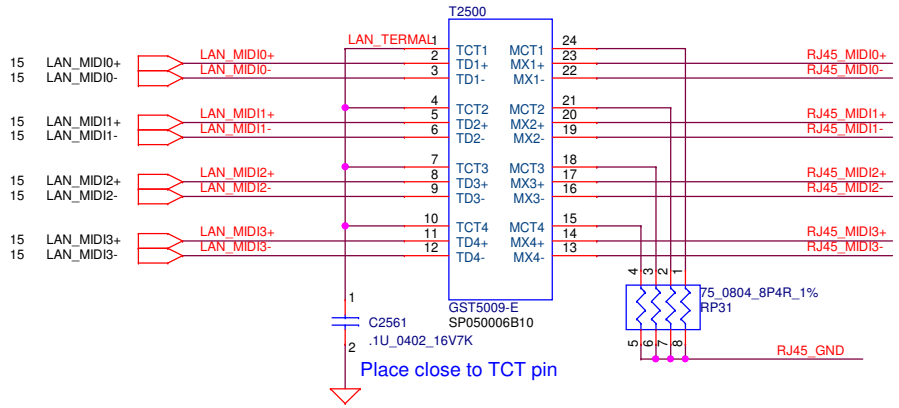

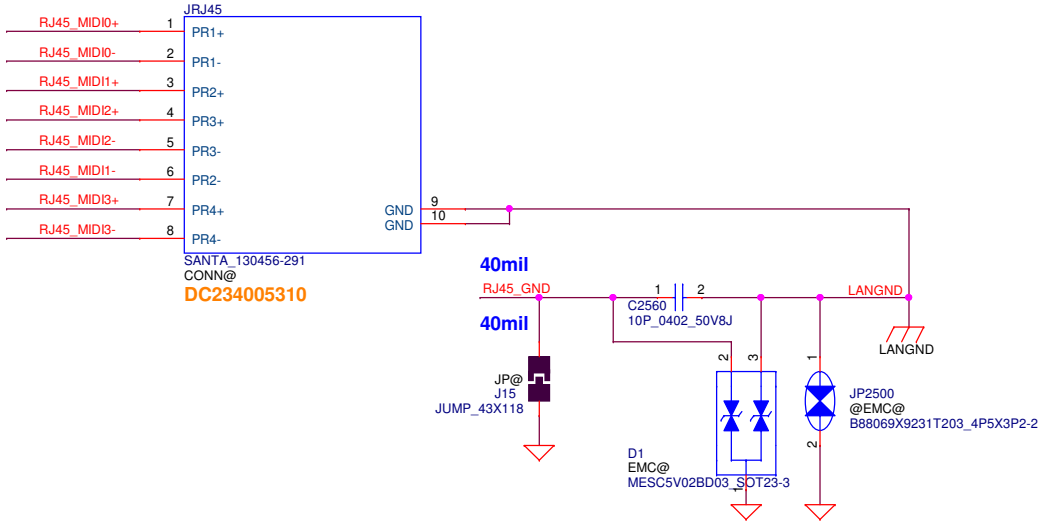

Card Reader Connector

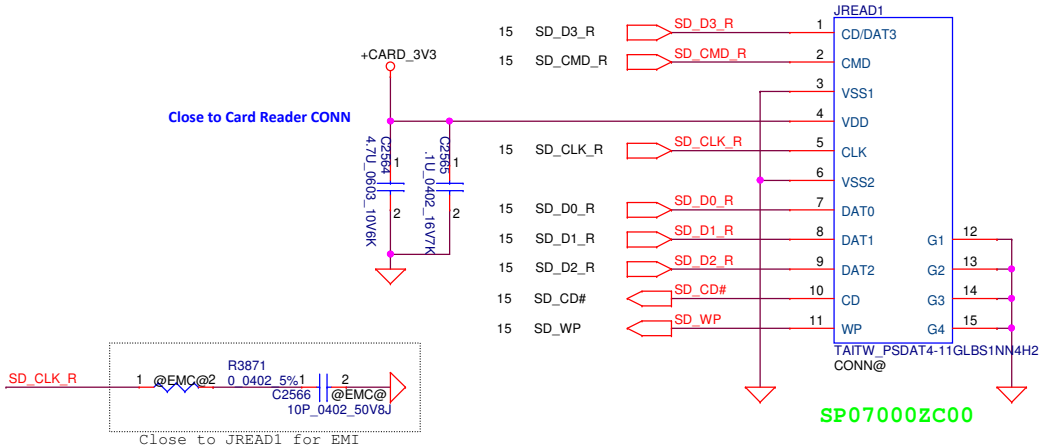

Security Classification	Compal Secret Data		
Issued Date	2014/11/04	Deciphered Date	2016/11/04

THIS SHEET OF ENGINEERING DRAWING IS THE PROPRIETARY PROPERTY OF COMPAL ELECTRONICS, INC. AND CONTAINS CONFIDENTIAL AND TRADE SECRET INFORMATION. THIS SHEET MAY NOT BE TRANSFERED FROM THE CUSTODY OF THE COMPETENT DIVISION OF R&D DEPARTMENT EXCEPT AS AUTHORIZED BY COMPAL ELECTRONICS, INC. NEITHER THIS SHEET NOR THE INFORMATION IT CONTAINS MAY BE USED BY OR DISCLOSED TO ANY THIRD PARTY WITHOUT PRIOR WRITTEN CONSENT OF COMPAL ELECTRONICS, INC.

Compal Electronics, Inc.

Title: LAN RJ45/CR SD Connector

Size: Custom | Document Number: A4W1E LA-C801P | Rev: 0.1

Date: Wednesday, March 04, 2015 | Sheet 16 of 34

HD Audio Codec

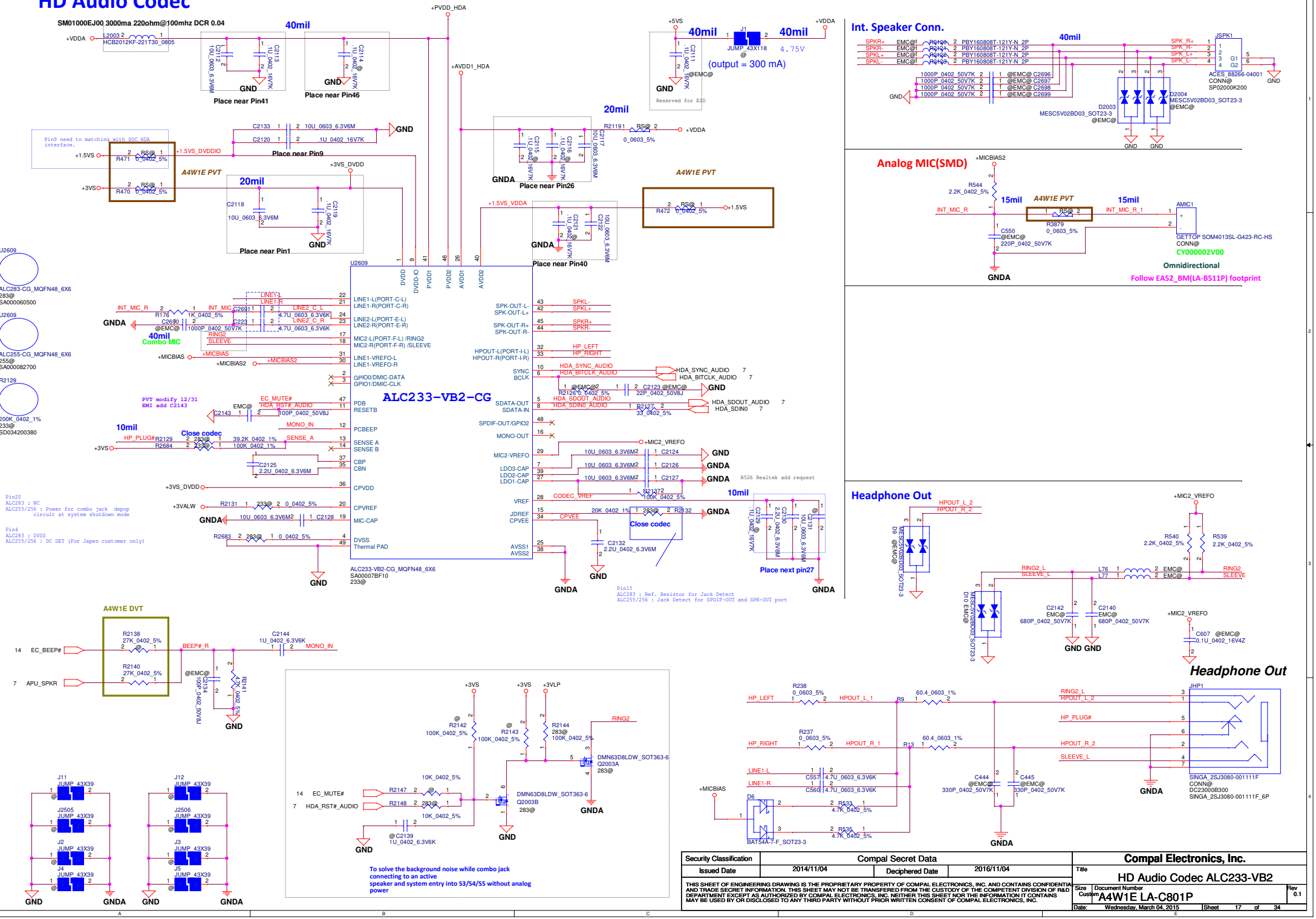

Security Classification	Compal Secret Data		
Issued Date	2014/11/04	Deciphered Date	2016/11/04

THIS SHEET OF ENGINEERING DRAWING IS THE PROPRIETARY PROPERTY OF COMPAL ELECTRONICS, INC. AND CONTAINS CONFIDENTIAL AND TRADE SECRET INFORMATION. THIS SHEET MAY NOT BE TRANSFERED FROM THE CUSTODY OF THE COMPETENT DIVISION OF R&D DEPARTMENT EXCEPT AS AUTHORIZED BY COMPAL ELECTRONICS, INC. NEITHER THIS SHEET NOR THE INFORMATION IT CONTAINS MAY BE USED BY OR DISCLOSED TO ANY THIRD PARTY WITHOUT PRIOR WRITTEN CONSENT OF COMPAL ELECTRONICS, INC.

Compal Electronics, Inc.

Title: HD Audio Codec ALC233-VB2

Size: Custom | Document Number: A4W1E LA-C801P | Rev: 0.1

Date: Wednesday, March 04, 2015 | Sheet 17 of 34

Wireless LAN

A4W1E

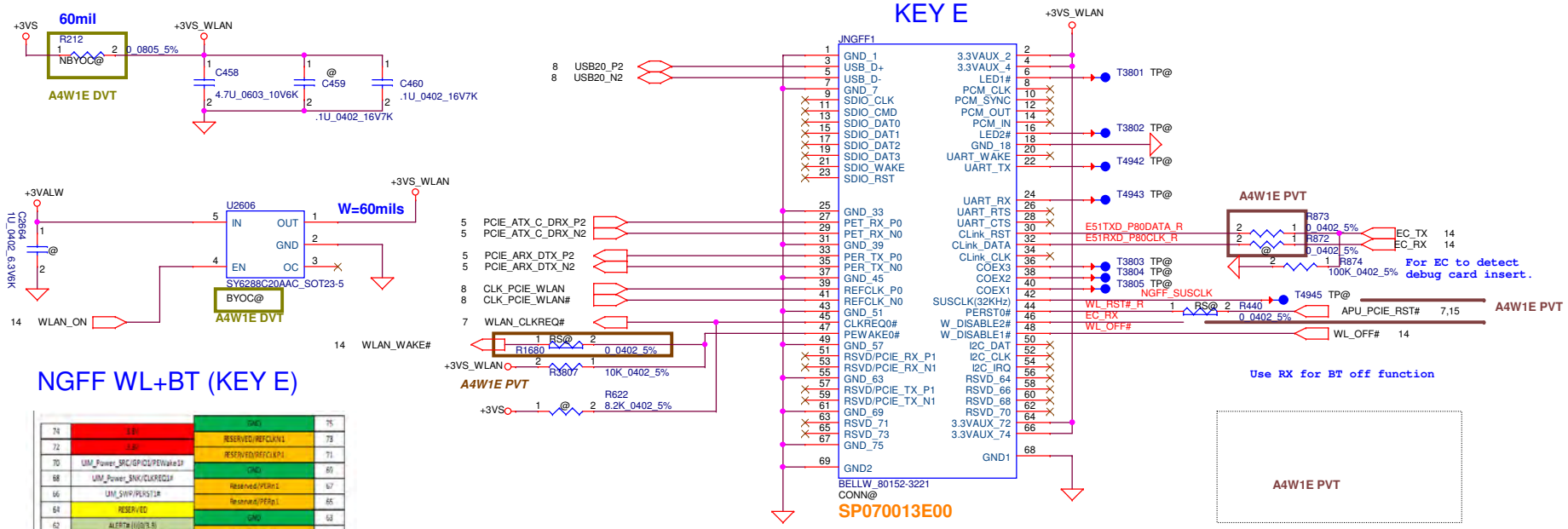

NGFF WL+BT (KEY E)

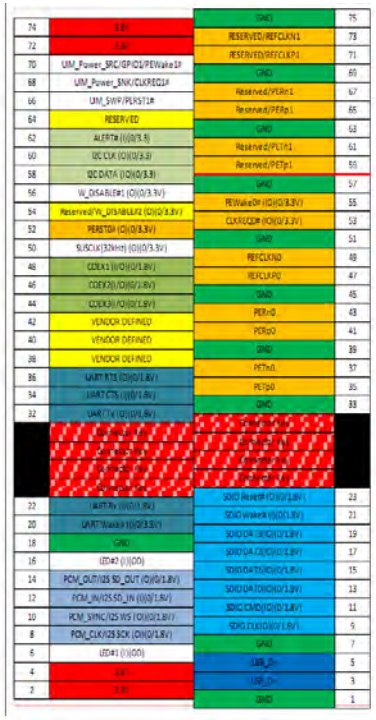

Security Classification	Compal Secret Data		
Issued Date	2014/11/04	Deciphered Date	2016/11/04

THIS SHEET OF ENGINEERING DRAWING IS THE PROPRIETARY PROPERTY OF COMPAL ELECTRONICS, INC. AND CONTAINS CONFIDENTIAL AND TRADE SECRET INFORMATION. THIS SHEET MAY NOT BE TRANSFERED FROM THE CUSTODY OF THE COMPETENT DIVISION OF R&D DEPARTMENT EXCEPT AS AUTHORIZED BY COMPAL ELECTRONICS, INC. NEITHER THIS SHEET NOR THE INFORMATION IT CONTAINS MAY BE USED BY OR DISCLOSED TO ANY THIRD PARTY WITHOUT PRIOR WRITTEN CONSENT OF COMPAL ELECTRONICS, INC.

Compal Electronics, Inc.

Title: M.2 Key E (WLAN)

Size: Custom | Document Number: A4W1E LA-C801P | Rev: 0.1

Date: Tuesday, March 10, 2015 | Sheet 18 of 34

SATA HDD Conn.

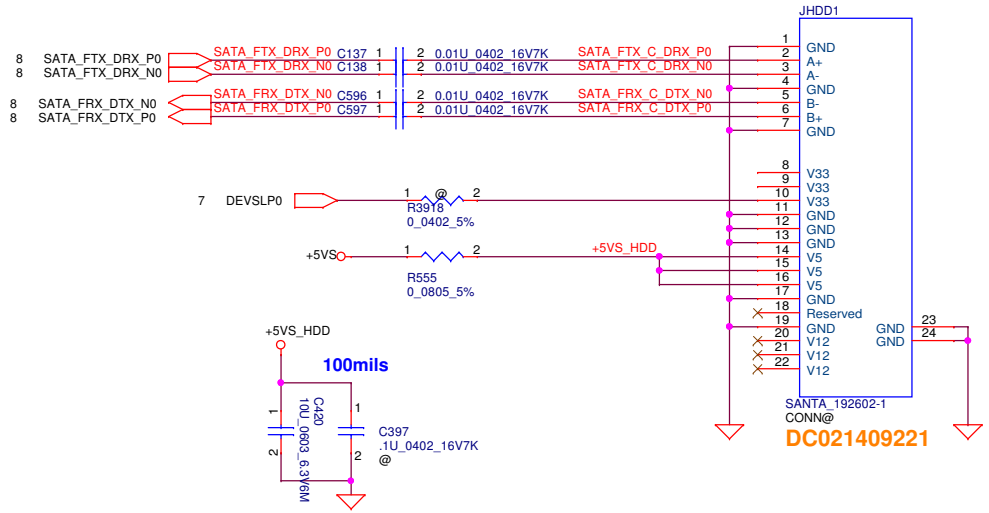

SATA ODD Conn.

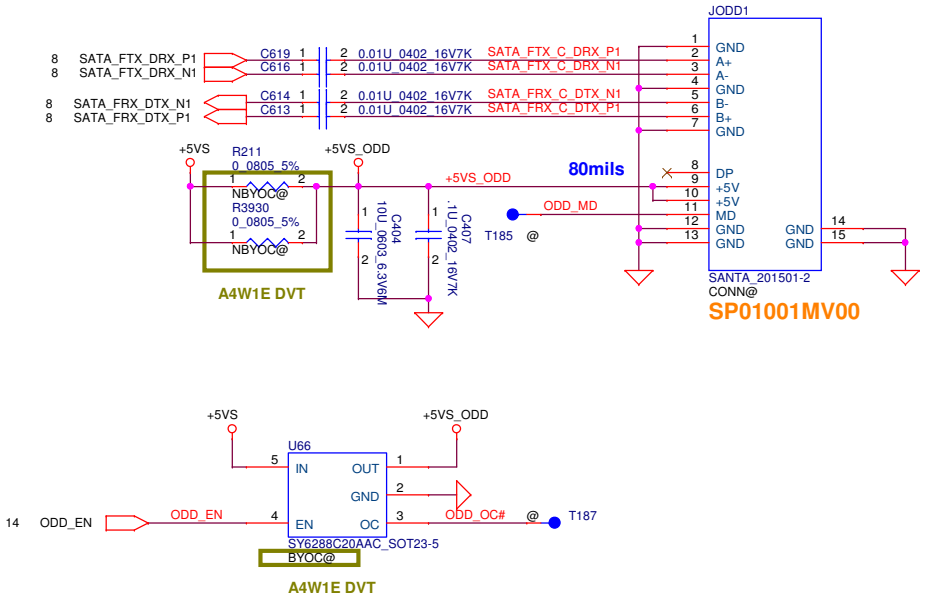

SATA HDD Conn.

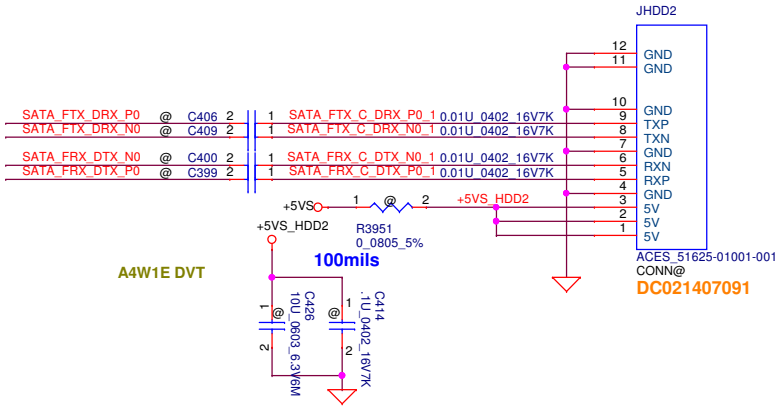

Security Classification	Compal Secret Data		
Issued Date	2014/11/04	Deciphered Date	2016/11/04

THIS SHEET OF ENGINEERING DRAWING IS THE PROPRIETARY PROPERTY OF COMPAL ELECTRONICS, INC. AND CONTAINS CONFIDENTIAL AND TRADE SECRET INFORMATION. THIS SHEET MAY NOT BE TRANSFERED FROM THE CUSTODY OF THE COMPETENT DIVISION OF R&D DEPARTMENT EXCEPT AS AUTHORIZED BY COMPAL ELECTRONICS, INC. NEITHER THIS SHEET NOR THE INFORMATION IT CONTAINS MAY BE USED BY OR DISCLOSED TO ANY THIRD PARTY WITHOUT PRIOR WRITTEN CONSENT OF COMPAL ELECTRONICS, INC.

Compal Electronics, Inc.

Title: HDD/ODD

Size: Custom | Document Number: A4W1E LA-C801P | Rev: 0.1

Date: Wednesday, March 04, 2015 | Sheet 19 of 34

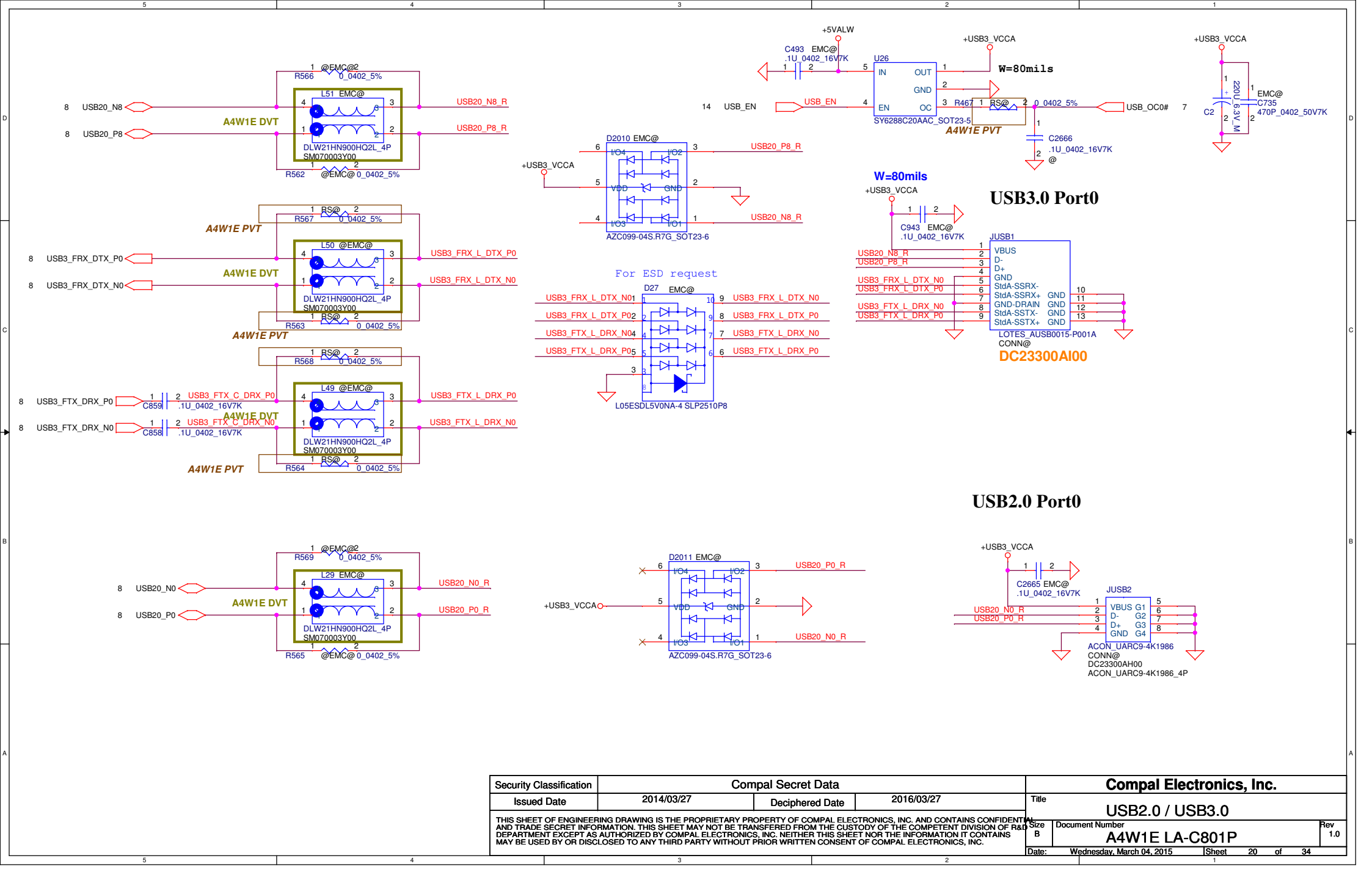

Security Classification	Compal Secret Data			Compal Electronics, Inc.
Issued Date	2014/03/27	Deciphered Date	2016/03/27	Title: USB2.0 / USB3.0
THIS SHEET OF ENGINEERING DRAWING IS THE PROPRIETARY PROPERTY OF COMPAL ELECTRONICS, INC. AND CONTAINS CONFIDENTIAL AND TRADE SECRET INFORMATION. THIS SHEET MAY NOT BE TRANSFERED FROM THE CUSTODY OF THE COMPETENT DIVISION OF R&D DEPARTMENT EXCEPT AS AUTHORIZED BY COMPAL ELECTRONICS, INC. NEITHER THIS SHEET NOR THE INFORMATION IT CONTAINS MAY BE USED BY OR DISCLOSED TO ANY THIRD PARTY WITHOUT PRIOR WRITTEN CONSENT OF COMPAL ELECTRONICS, INC.				Size: B; Document Number: A4W1E LA-C801P; Rev: 1.0
				Date: Wednesday, March 04, 2015; Sheet 20 of 34

ON/OFF BTN

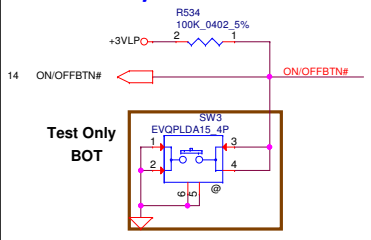

KB Conn.

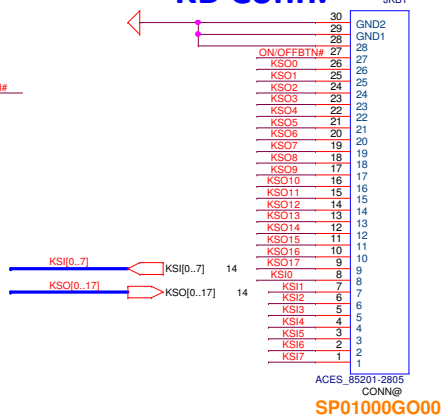

KB BackLight Conn. Reserve

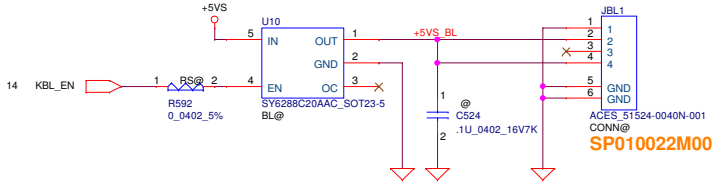

TP/B Conn.

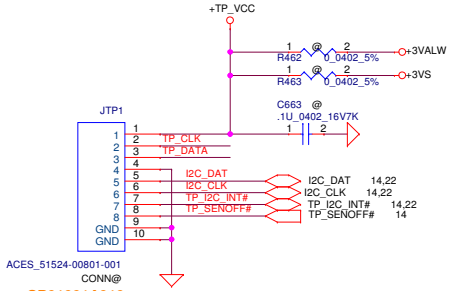

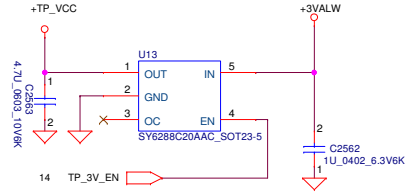

TP_PWR_EN follow SYSON behavior

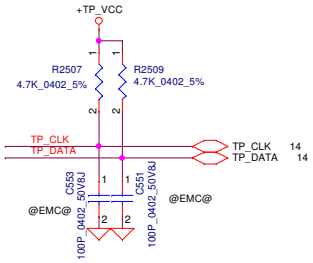

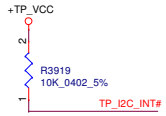

TPM Board for 2015

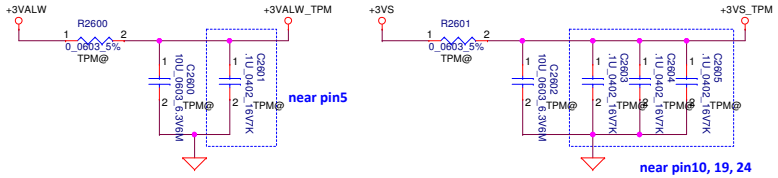

BADD	SELECTION
0	EEh - EFh
* 1	7Eh - 7Fh

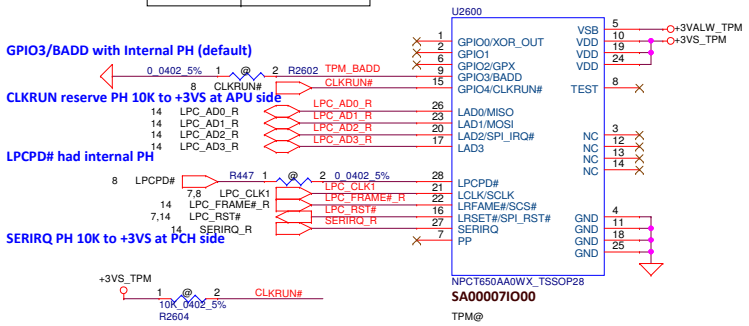

Lid Switch

(Hall Effect Switch)

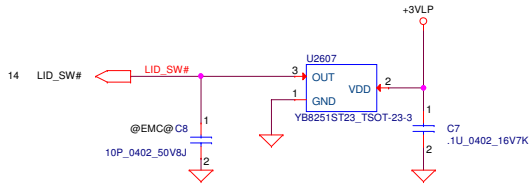

LED

Dual Amber+Blue

LTST-S115TBKF-CA (SC50000C500)

Vf @ 5 mA :

UD5: 1.7 ~ 2.3V
(3.3-1.7)/300=5.71 mA
(3.3-2.3)/300=3.57 mA
R min: 100 ohm
R max 700 ohm

CB5: 2.65~3.05V
(3.3-2.65)/50=13.00 mA
(3.3-3.05)/100=5.0 mA
R min: 50 ohm
R max:475 ohm

100 1% :SD034100080
150 1% :SD034150080
301 1% :SD034301080
680 1% :SD034680080

120 5% :SD028120080
560 5% :SD028560080
200 5% :SD028200080

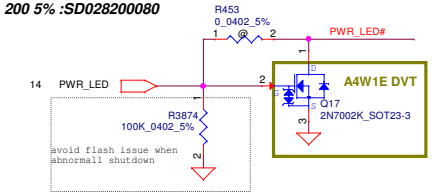

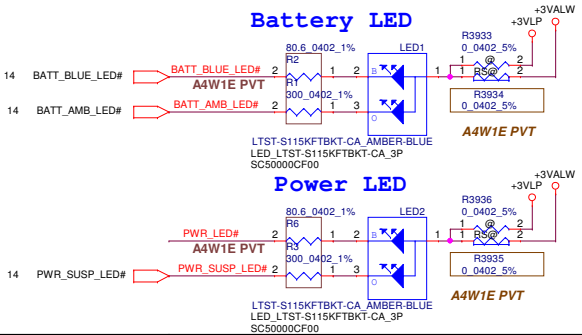

Security Classification	Compal Secret Data		
Issued Date	2014/11/04	Deciphered Date	2016/11/04

THIS SHEET OF ENGINEERING DRAWING IS THE PROPRIETARY PROPERTY OF COMPAL ELECTRONICS, INC. AND CONTAINS CONFIDENTIAL AND TRADE SECRET INFORMATION. THIS SHEET MAY NOT BE TRANSFERED FROM THE CUSTODY OF THE COMPETENT DIVISION OF R&D DEPARTMENT EXCEPT AS AUTHORIZED BY COMPAL ELECTRONICS, INC. NEITHER THIS SHEET NOR THE INFORMATION IT CONTAINS MAY BE USED BY OR DISCLOSED TO ANY THIRD PARTY WITHOUT PRIOR WRITTEN CONSENT OF COMPAL ELECTRONICS, INC.

Compal Electronics, Inc.

Title: KB/TP/TPM Connector/LED

Size: Custom | Document Number: A4W1E LA-C801P | Rev: 0.1

Date: Tuesday, March 10, 2015 | Sheet 21 of 34

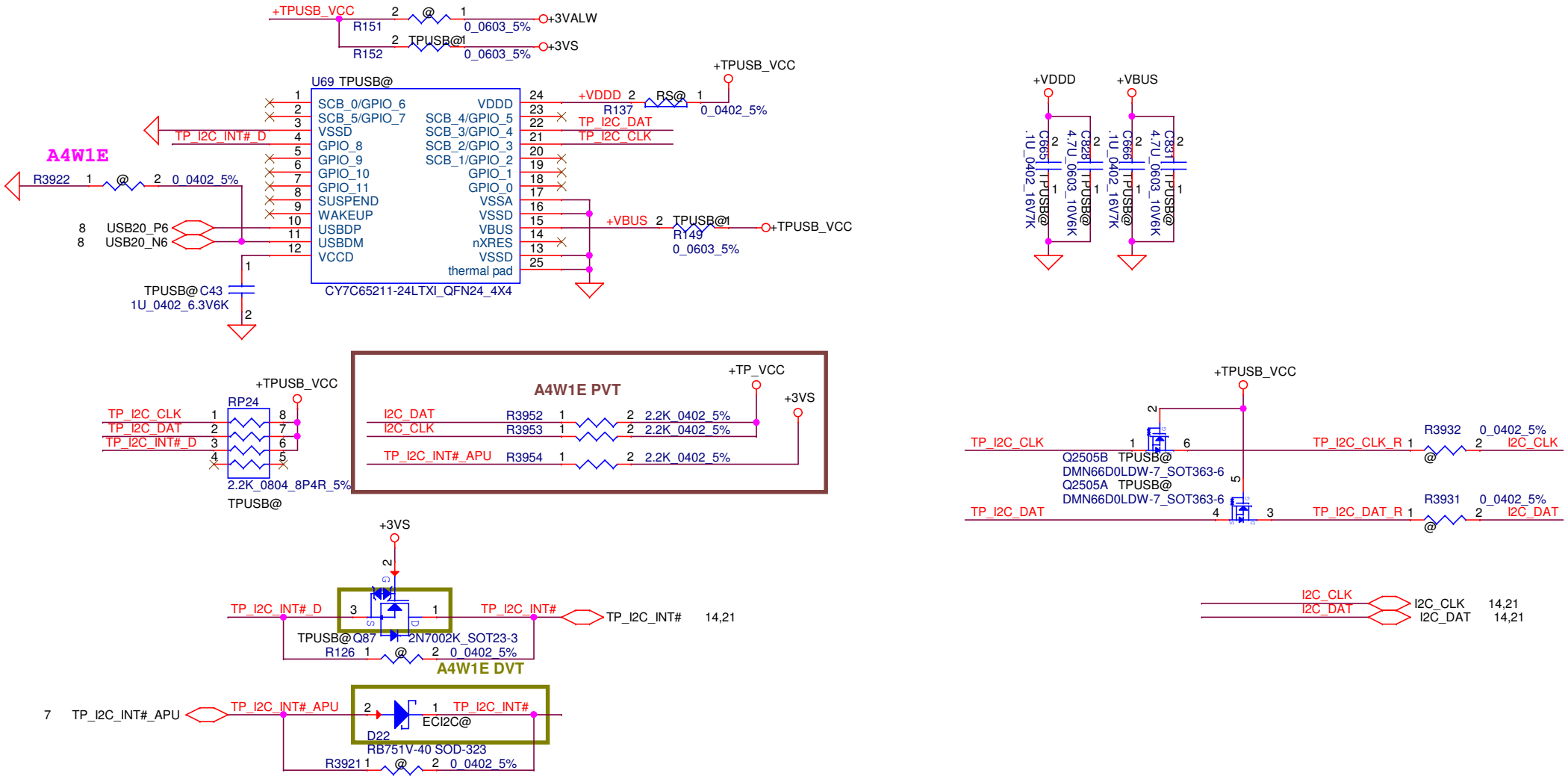

Security Classification	Compal Secret Data		
Issued Date	2014/11/04	Deciphered Date	2016/11/04

THIS SHEET OF ENGINEERING DRAWING IS THE PROPRIETARY PROPERTY OF COMPAL ELECTRONICS, INC. AND CONTAINS CONFIDENTIAL AND TRADE SECRET INFORMATION. THIS SHEET MAY NOT BE TRANSFERED FROM THE CUSTODY OF THE COMPETENT DIVISION OF R&D DEPARTMENT EXCEPT AS AUTHORIZED BY COMPAL ELECTRONICS, INC. NEITHER THIS SHEET NOR THE INFORMATION IT CONTAINS MAY BE USED BY OR DISCLOSED TO ANY THIRD PARTY WITHOUT PRIOR WRITTEN CONSENT OF COMPAL ELECTRONICS, INC.

Compal Electronics, Inc.

Title: USB-I2C CY7C65211

Size: Custom | Document Number: A4W1E LA-C801P | Rev: 0.1

Date: Wednesday, March 04, 2015 | Sheet 22 of 34

FAN1 Conn

FAN Conn

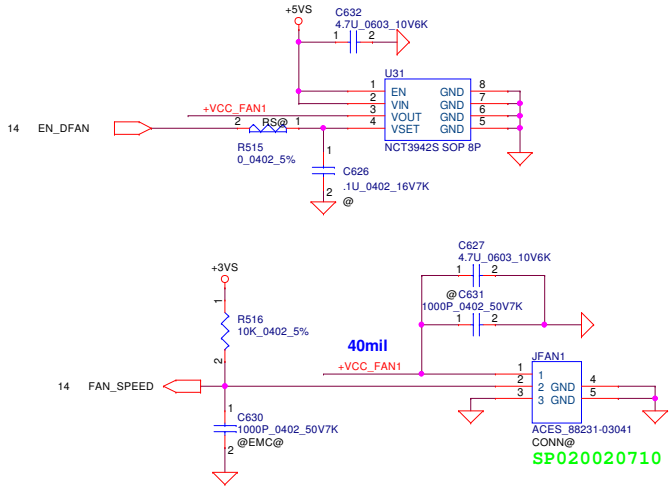

Screw Hole

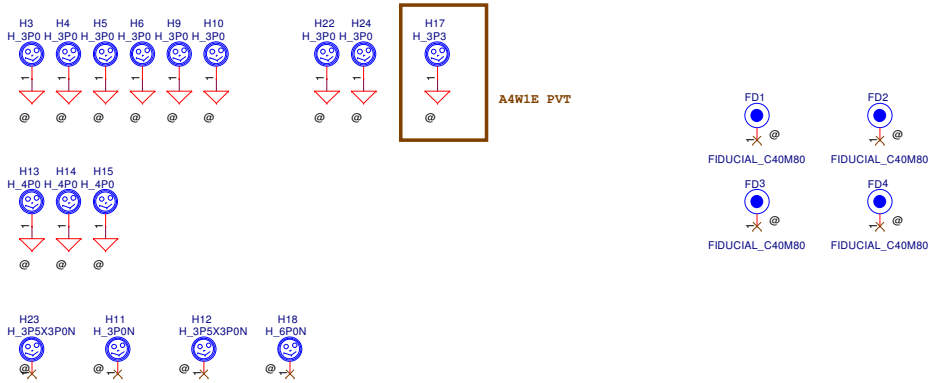

Reset Circuit

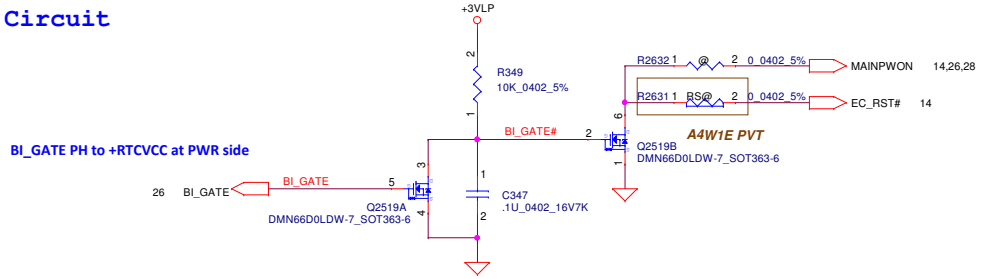

Reset Button

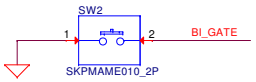

BI SW

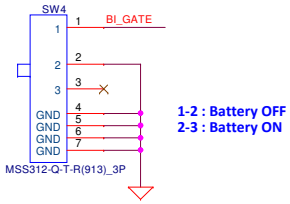

Security Classification	Compal Secret Data			Compal Electronics, Inc.
Issued Date	2014/11/04	Deciphered Date	2016/11/04	Title: FAN/BATT RESET_DEGUB SW
Size: Custom	Document Number: A4W1E LA-C801P			Rev: 0.1
Date: Wednesday, March 04, 2015	Sheet 23 of 34			

THIS SHEET OF ENGINEERING DRAWING IS THE PROPRIETARY PROPERTY OF COMPAL ELECTRONICS, INC. AND CONTAINS CONFIDENTIAL AND TRADE SECRET INFORMATION. THIS SHEET MAY NOT BE TRANSFERED FROM THE CUSTODY OF THE COMPETENT DIVISION OF R&D DEPARTMENT EXCEPT AS AUTHORIZED BY COMPAL ELECTRONICS, INC. NEITHER THIS SHEET NOR THE INFORMATION IT CONTAINS MAY BE USED BY OR DISCLOSED TO ANY THIRD PARTY WITHOUT PRIOR WRITTEN CONSENT OF COMPAL ELECTRONICS, INC.

+5VALW TO +5VS
+3VALW TO +3VS
Load switch

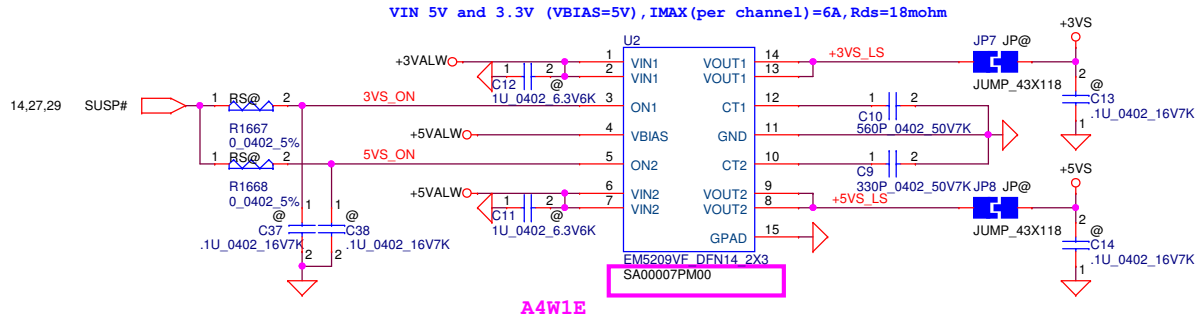

+1.8VALW TO +1.8VS
+1.5V TO +1.5VS
Load switch

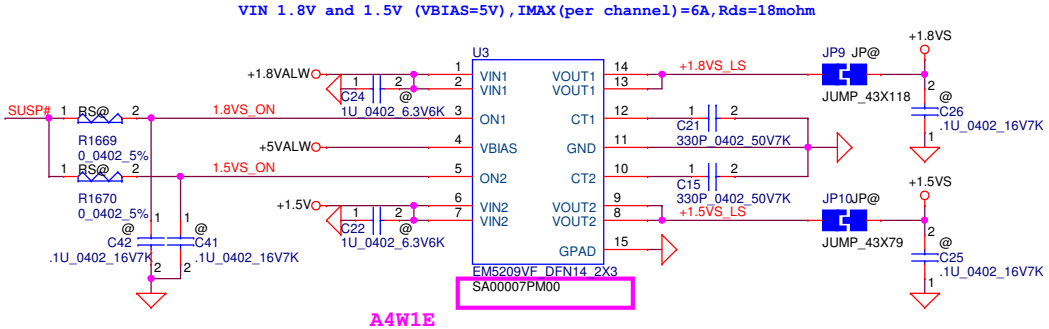

+0.95VALW to +0.95VS

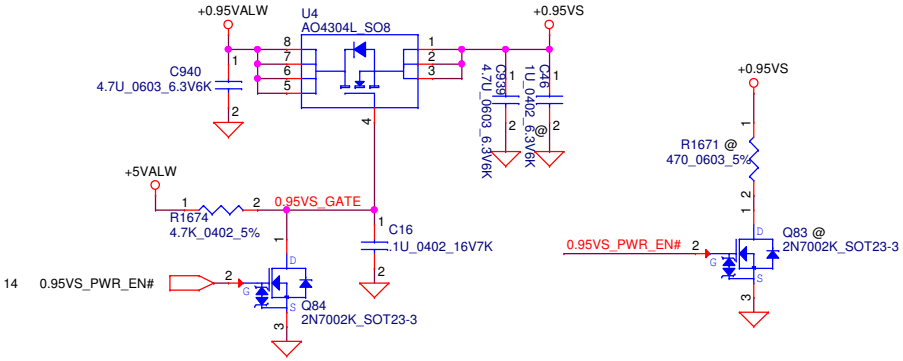

Security Classification	Compal Secret Data			Compal Electronics, Inc.
Issued Date	2014/03/27	Deciphered Date	2016/03/27	Title: P22-DC INTERFACE
THIS SHEET OF ENGINEERING DRAWING IS THE PROPRIETARY PROPERTY OF COMPAL ELECTRONICS, INC. AND CONTAINS CONFIDENTIAL AND TRADE SECRET INFORMATION. THIS SHEET MAY NOT BE TRANSFERED FROM THE CUSTODY OF THE COMPETENT DIVISION OF R&D DEPARTMENT EXCEPT AS AUTHORIZED BY COMPAL ELECTRONICS, INC. NEITHER THIS SHEET NOR THE INFORMATION IT CONTAINS MAY BE USED BY OR DISCLOSED TO ANY THIRD PARTY WITHOUT PRIOR WRITTEN CONSENT OF COMPAL ELECTRONICS, INC.				Size: B; Document Number: A4W1E LA-C801P; Rev: 1.0
				Date: Wednesday, March 04, 2015; Sheet 24 of 34

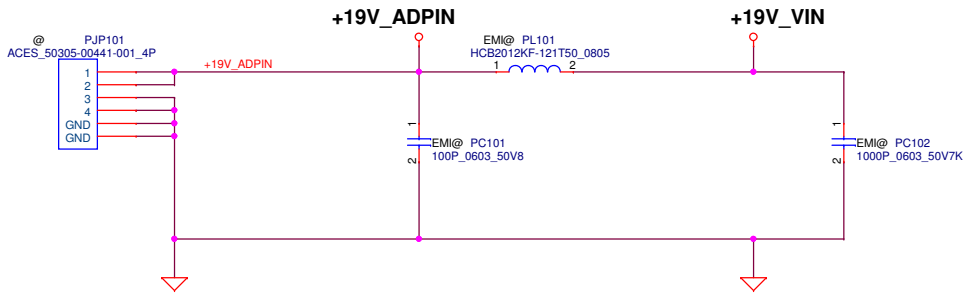

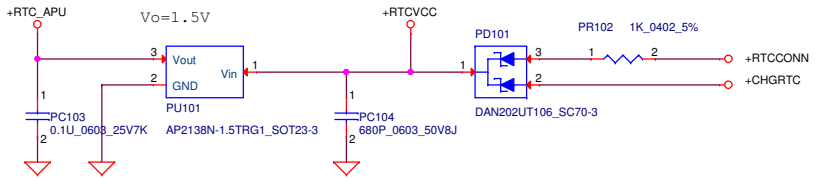

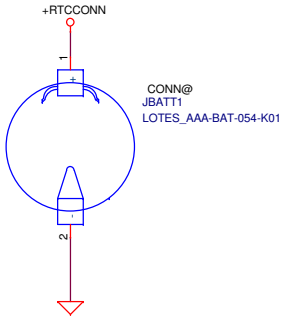

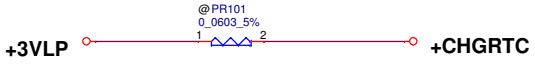

Security Classification	Compal Secret Data		
Issued Date	2014/10/20	Deciphered Date	2016/10/20

THIS SHEET OF ENGINEERING DRAWING IS THE PROPRIETARY PROPERTY OF COMPAL ELECTRONICS, INC. AND CONTAINS CONFIDENTIAL AND TRADE SECRET INFORMATION. THIS SHEET MAY NOT BE TRANSFERED FROM THE CUSTODY OF THE COMPETENT DIVISION OF R&D DEPARTMENT EXCEPT AS AUTHORIZED BY COMPAL ELECTRONICS, INC. NEITHER THIS SHEET NOR THE INFORMATION IT CONTAINS MAY BE USED BY OR DISCLOSED TO ANY THIRD PARTY WITHOUT PRIOR WRITTEN CONSENT OF COMPAL ELECTRONICS, INC.

Compal Electronics, Inc.

Title: DCIN

Size: Custom | Document Number: A4W1E | Rev: 0.1

Date: Wednesday, March 04, 2015 | Sheet 25 of 34

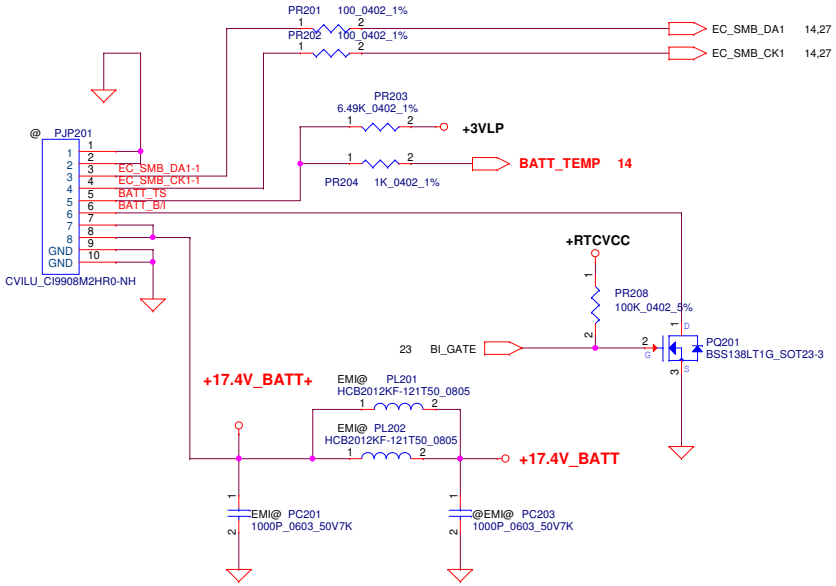

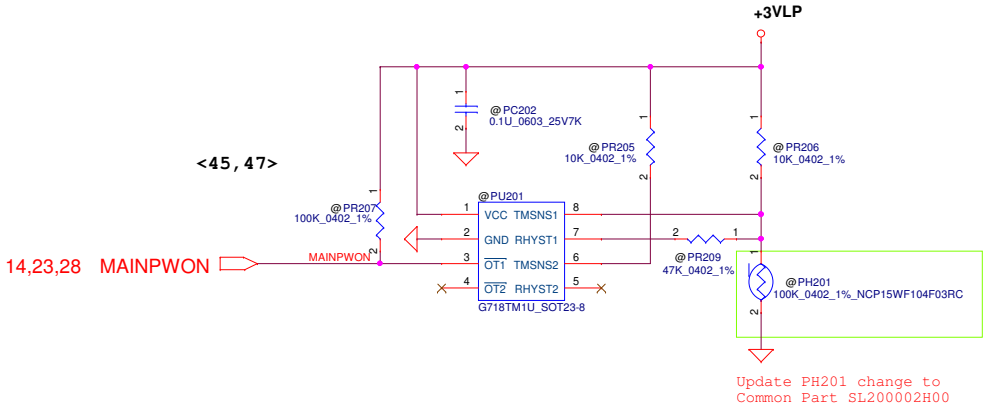


```
---Battery_pin define---      ---Battery Con_pin define---
PIN1 GND                      PIN8 GND
PIN2 GND                      PIN7 GND
PIN3 SMD                      PIN6 SMD
PIN4 SMC                      PIN5 SMC
PIN5 TS                       PIN4 TS
PIN6 B/I                      PIN3 B/I
PIN7 Batt+                    PIN2 Batt+
PIN8 Batt+                    PIN1 Batt+
```

For KB9022 OTP	Active	Recovery
VCIN0_PH(V)	92C, 1V	56C, 2.V
PH202(ohm)	7.3K	26.11K

For KB9012 sense 20mΩ	Active	Recovery
45W	48.15W, 0.73V	38.7W,0.59V
65W	69.55W, 0.73V	55.9W,0.59V

PH202 under CPU botten side :
CPU thermal protection at 92 degree C (shutdown)
Recovery at 56 degree C

2013/10/02
Add for ENE9022 Battery Voltage drop detection.
Connect to ENE9022 pin64 AD1.

Reserve for 2-cell design

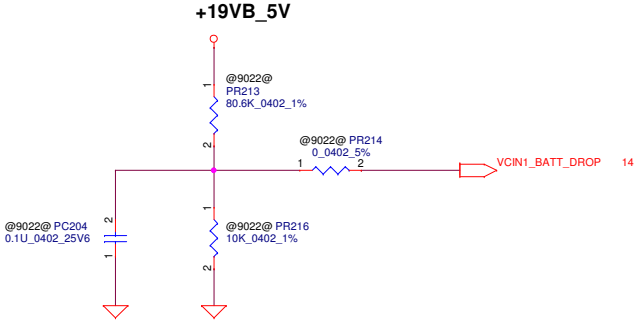

For 45W adapter==>action 48.15W , Recovery 38.7W
48.15W:
Iada= 0~2.253A (48.15W/19V=2.534A)
ADP_I=20*Iada*Rsense
ADP_I=20*2.534*0.02=1.01
38.7W:
Iada= 0~2.036A (38.7W/19V=2.036A)
ADP_I=20*Iada*Rsense
ADP_I=20*2.036*0.02=0.814

CP=45W*0.85=38.25W

For 65W adapter==>action 69.55W , Recovery 55.9W
69.55W:
Iada= 0~3.661A (69.55W/19V=3.661A)
ADP_I=20*Iada*Rsense
ADP_I=20*3.661*0.02=1.464
55.9W:
Iada= 0~2.942A (55.9W/19V=2.942A)
ADP_I=20*Iada*Rsense
ADP_I=20*2.942*0.02=1.177

CP=65W*0.85=55.25W

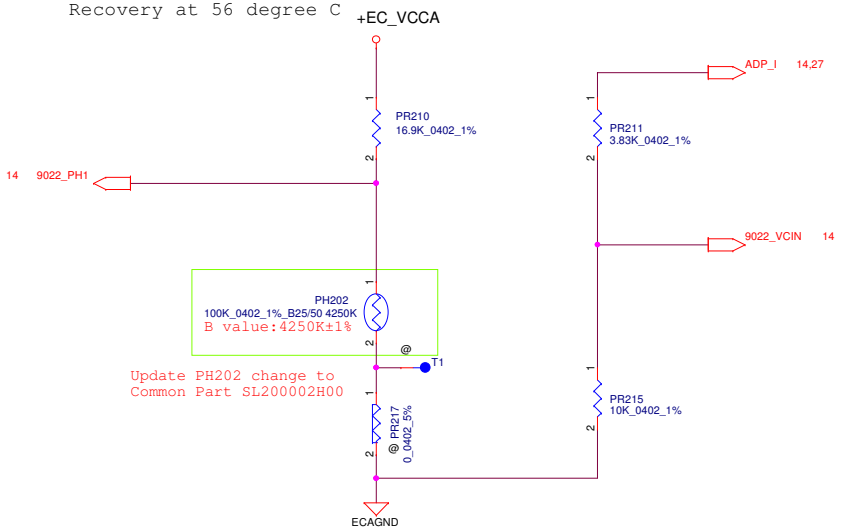

Security Classification	Compal Secret Data		
Issued Date	2014/10/20	Deciphered Date	2016/10/20

THIS SHEET OF ENGINEERING DRAWING IS THE PROPRIETARY PROPERTY OF COMPAL ELECTRONICS, INC. AND CONTAINS CONFIDENTIAL AND TRADE SECRET INFORMATION. THIS SHEET MAY NOT BE TRANSFERED FROM THE CUSTODY OF THE COMPETENT DIVISION OF R&D DEPARTMENT EXCEPT AS AUTHORIZED BY COMPAL ELECTRONICS, INC. NEITHER THIS SHEET NOR THE INFORMATION IT CONTAINS MAY BE USED BY OR DISCLOSED TO ANY THIRD PARTY WITHOUT PRIOR WRITTEN CONSENT OF COMPAL ELECTRONICS, INC.

Compal Electronics, Inc.

Title: BATTERY CONN / OTP

Size: Custom | Document Number: A4W1E | Rev: 0.1

Date: Wednesday, March 04, 2015 | Sheet 26 of 34

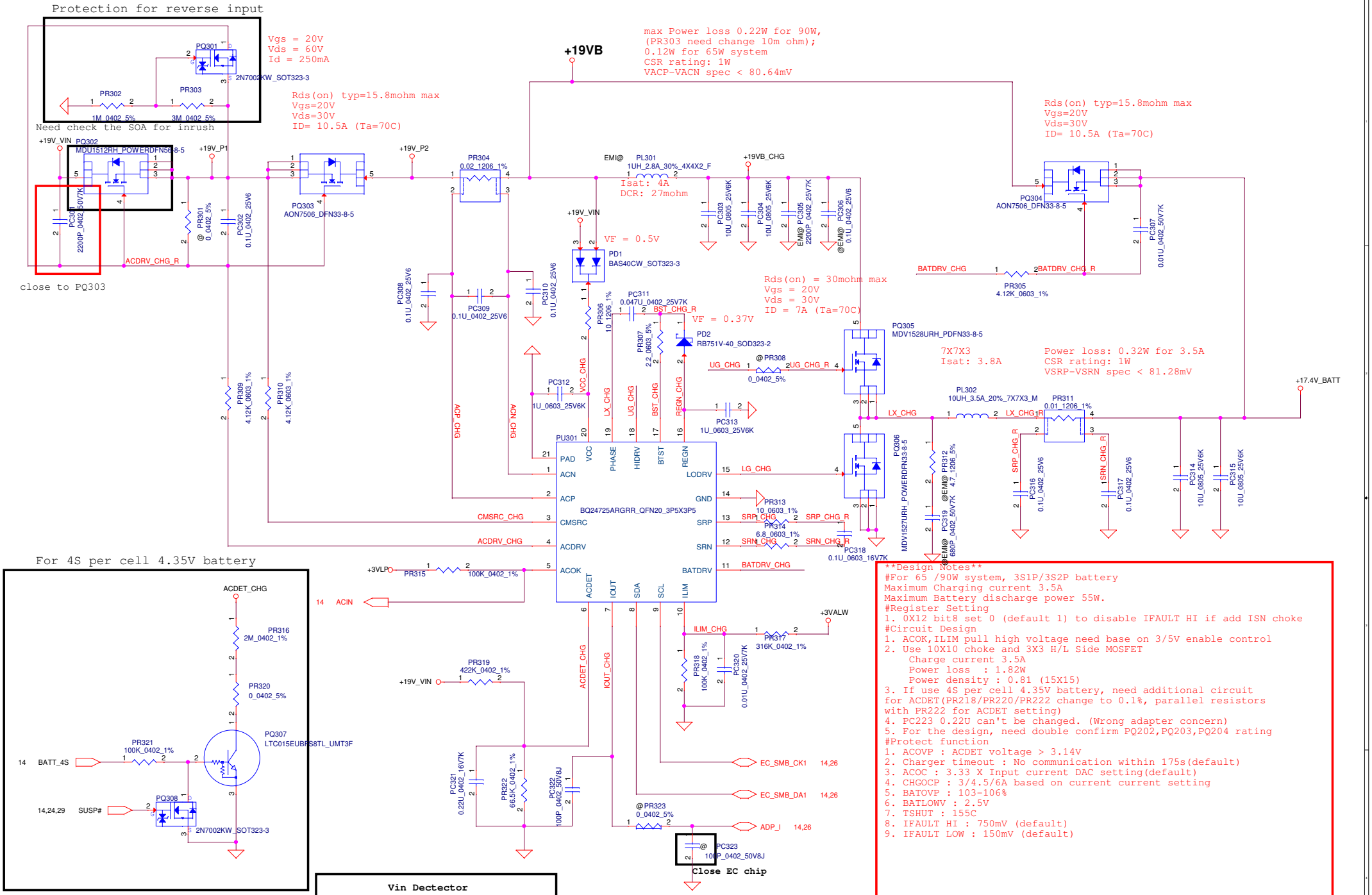
Protection for reverse input
Vgs = 20V
Vds = 60V
Id = 250mA
PQ301
2N7002KW_SOT323-3
PR302
1M_0402_5%
PR303
3M_0402_5%
Need check the SOA for inrush
+19V_VIN
PQ302
MDU1512RH_POWERDFN56-8-5
PC301
2200P_0402_50V7K
close to PQ303
+19V_P1
PR301
@_0402_5%
PC302
0.1U_0402_25V6
ACDRV_CHG_R
PQ303
AON7506_DFN33-8-5
+19V_P2
PR304
0.02_1206_1%
+19VB
max Power loss 0.22W for 90W,
(PR303 need change 10m ohm);
0.12W for 65W system
CSR rating: 1W
VACP-VACN spec < 80.64mV
EMI@
PL301
1UH_2.8A_30%_4X4X2_F
Isat: 4A
DCR: 27mohm
+19VB_CHG
PC303
10U_0805_25V6K
PC304
10U_0805_25V6K
EMI@ PC305
2200P_0402_25V7K
@EMI@ PC306
0.1U_0402_25V6
Rds(on) typ=15.8mohm max
Vgs=20V
Vds=30V
ID= 10.5A (Ta=70C)
PQ304
AON7506_DFN33-8-5
PC307
0.01U_0402_50V7K
BATDRV_CHG
BATDRV_CHG_R
PR305
4.12K_0603_1%
+19V_VIN
PD1
BAS40CW_SOT323-3
VF = 0.5V
PC308
0.1U_0402_25V6
PC309
0.1U_0402_25V6
PC310
0.1U_0402_25V6
PR306
10_1206_1%
PC311
0.047U_0402_25V7K
BST_CHG_R
VF = 0.37V
PR307
2.2_0603_5%
PD2
RB751V-40_SOD323-2
Rds(on) = 30mohm max
Vgs = 20V
Vds = 30V
ID = 7A (Ta=70C)
PQ305
MDV1528URH_PDFN33-8-5
7X7X3
Isat: 3.8A
Power loss: 0.32W for 3.5A
CSR rating: 1W
VSRP-VSRN spec < 81.28mV
UG_CHG
@PR308
UG_CHG_R
0_0402_5%
PC312
1U_0603_25V6K
PC313
1U_0603_25V6K
PR309
4.12K_0603_1%
PR310
4.12K_0603_1%
CHG_CP
CHG_VN
VCC_CHG
LX_CHG
UG_CHG
BST_CHG
REGN_CHG
PU301
BQ24725ARGRR_QFN20_3P5X3P5
PAD
ACN
ACP
CMSRC
ACDRV
ACOK
VCC
PHASE
HIDRV
BTST
REGN
LODRV
GND
SRP
SRN
BATDRV
ACDET
IOUT
SDA
SCL
ILIM
CMSRC_CHG
ACDRV_CHG
LG_CHG
PR313
10_0603_1%
SRP_CHG
SRP_CHG_R
PR314
6.8_0603_1%
SRN_CHG
SRN_CHG_R
PC318
0.1U_0603_16V7K
BATDRV_CHG
+17.4V_BATT
PL302
10UH_3.5A_20%_7X7X3_M
LX_CHG
LX_CHG_R
PR311
0.01_1206_1%
PQ306
MDV1527URH_POWERDFN33-8-5
PR312
4.7_1206_5%
PC319
680P_0402_50V7K
SRP_CHG_R
PC316
0.1U_0402_25V6
SRN_CHG_R
PC317
0.1U_0402_25V6
PC314
10U_0805_25V6K
PC315
10U_0805_25V6K
+3VLP
PR315
100K_0402_1%
14 ACIN
+3VALW
ILIM_CHG
PR317
316K_0402_1%
PR318
100K_0402_1%
PC320
0.01U_0402_25V7K
PR319
422K_0402_1%
+19V_VIN
ACDET_CHG
IOUT_CHG
PC321
0.22U_0402_16V7K
PR322
66.5K_0402_1%
PC322
100P_0402_50V8J
EC_SMB_CK1 14,26
EC_SMB_DA1 14,26
@PR323
0_0402_5%
ADP_I 14,26
@ PC323
100P_0402_50V8J
Close EC chip
For 4S per cell 4.35V battery
ACDET_CHG
PR316
2M_0402_1%
PR320
0_0402_5%
PQ307
LTC015EUBFS8TL_UMT3F
PR321
100K_0402_1%
14 BATT_4S
PQ308
14,24,29 SUSP#
2N7002KW_SOT323-3
Design Notes
#For 65 /90W system, 3S1P/3S2P battery
Maximum Charging current 3.5A
Maximum Battery discharge power 55W.
#Register Setting
1. 0X12 bit8 set 0 (default 1) to disable IFAULT HI if add ISN choke
#Circuit Design
1. ACOK,ILIM pull high voltage need base on 3/5V enable control
2. Use 10X10 choke and 3X3 H/L Side MOSFET
Charge current 3.5A
Power loss : 1.82W
Power density : 0.81 (15X15)
3. If use 4S per cell 4.35V battery, need additional circuit
for ACDET(PR218/PR220/PR222 change to 0.1%, parallel resistors
with PR222 for ACDET setting)
4. PC223 0.22U can't be changed. (Wrong adapter concern)
5. For the design, need double confirm PQ202,PQ203,PQ204 rating
#Protect function
1. ACOVP : ACDET voltage > 3.14V
2. Charger timeout : No communication within 175s(default)
3. ACOC : 3.33 X Input current DAC setting(default)
4. CHGOCP : 3/4.5/6A based on current current setting
5. BATOVP : 103-106%
6. BATLOWV : 2.5V
7. TSHUT : 155C
8. IFAULT HI : 750mV (default)
9. IFAULT LOW : 150mV (default)
Vin Dectector
Min. Typ Max.
L-->H 17.16V 17.63V 18.12V
H-->L 16.76V 17.22V 17.70V
VILIM = 20*ILIM*Rsr
ILIM = 3.3*100/(100+316)/20/0.01
= 3.966 A
Security Classification
Compal Secret Data
Issued Date
2014/10/20
Deciphered Date
2016/10/20
THIS SHEET OF ENGINEERING DRAWING IS THE PROPRIETARY PROPERTY OF COMPAL ELECTRONICS, INC. AND CONTAINS CONFIDENTIAL AND TRADE SECRET INFORMATION. THIS SHEET MAY NOT BE TRANSFERED FROM THE CUSTODY OF THE COMPETENT DIVISION OF R&D DEPARTMENT EXCEPT AS AUTHORIZED BY COMPAL ELECTRONICS, INC. NEITHER THIS SHEET NOR THE INFORMATION IT CONTAINS MAY BE USED BY OR DISCLOSED TO ANY THIRD PARTY WITHOUT PRIOR WRITTEN CONSENT OF COMPAL ELECTRONICS, INC.
Compal Electronics, Inc.
Title
CHARGER
Size Custom
Document Number
A4W1E
Rev 0.1
Date: Wednesday, March 04, 2015
Sheet 27 of 34

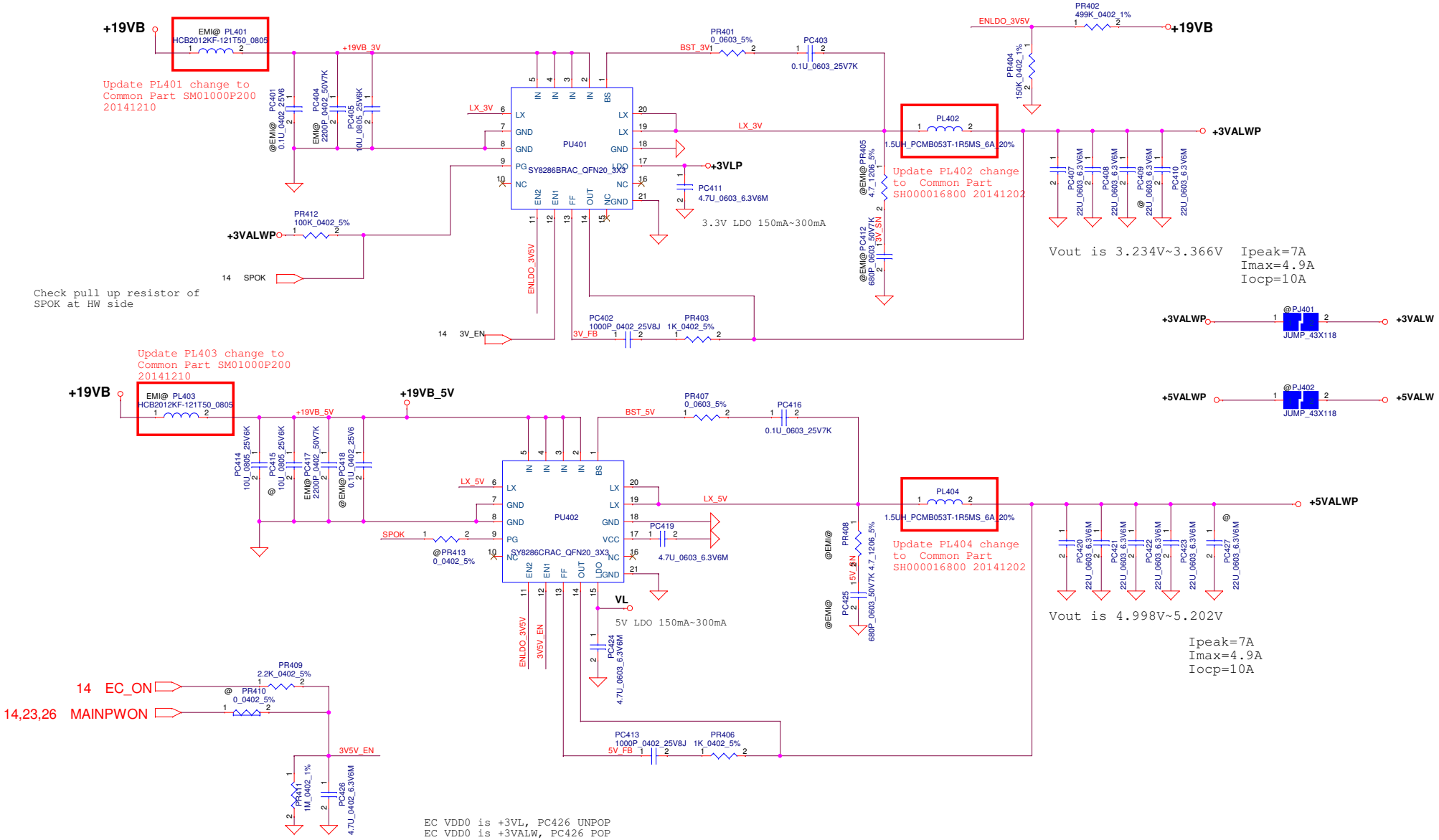

Security Classification	Compal Secret Data		
Issued Date	2014/10/20	Deciphered Date	2016/10/20

THIS SHEET OF ENGINEERING DRAWING IS THE PROPRIETARY PROPERTY OF COMPAL ELECTRONICS, INC. AND CONTAINS CONFIDENTIAL AND TRADE SECRET INFORMATION. THIS SHEET MAY NOT BE TRANSFERED FROM THE CUSTODY OF THE COMPETENT DIVISION OF R&D DEPARTMENT EXCEPT AS AUTHORIZED BY COMPAL ELECTRONICS, INC. NEITHER THIS SHEET NOR THE INFORMATION IT CONTAINS MAY BE USED BY OR DISCLOSED TO ANY THIRD PARTY WITHOUT PRIOR WRITTEN CONSENT OF COMPAL ELECTRONICS, INC.

Compal Electronics, Inc.

Title: +3VALW/+5VALW

Size: Custom | Document Number: A4W1E | Rev: 0.1

Date: Wednesday, March 04, 2015 | Sheet 28 of 34

Module model information

RT8207M_V1.mdd For Single layer
RT8207M_V2.mdd For Dual layer

Pin19 need pull separate from +1.5VP.
If you have +1.5V and +0.75V sequence question,
you can change from +1.5VP to +1.5VS.

0.75Volt +/- 5%
TDC 0.7A
Peak Current 1A

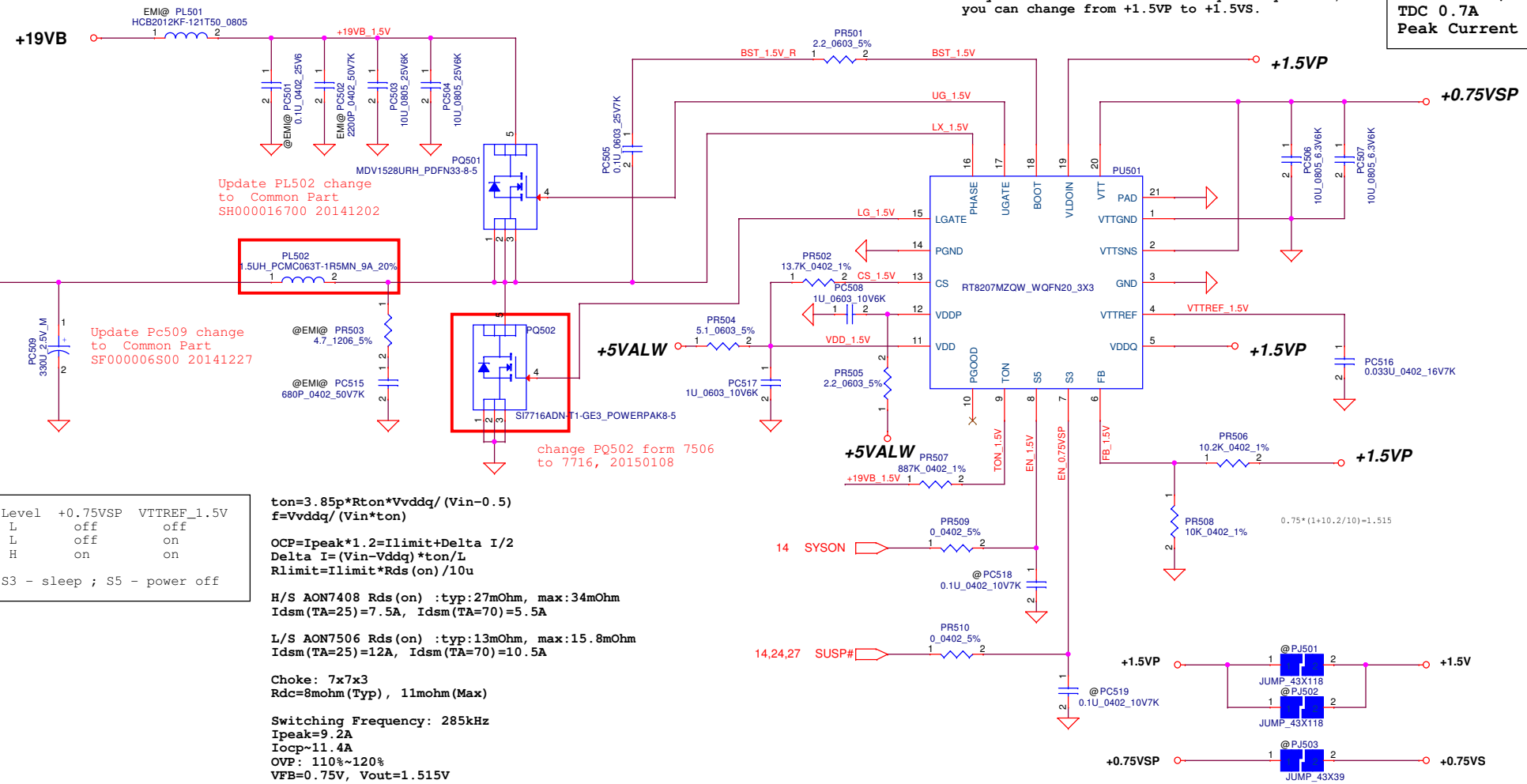

Mode	Level	+0.75VSP	VTTREF_1.5V
S5	L	off	off
S3	L	off	on
S0	H	on	on

Note: S3 - sleep ; S5 - power off

ton=3.85p*Rton*Vvddq/(Vin-0.5)
f=Vvddq/(Vin*ton)

OCP=Ipeak*1.2=Ilimit+Delta I/2
Delta I=(Vin-Vddq)*ton/L
Rlimit=Ilimit*Rds(on)/10u

H/S AON7408 Rds(on) :typ:27mOhm, max:34mOhm
Idsm(TA=25)=7.5A, Idsm(TA=70)=5.5A

L/S AON7506 Rds(on) :typ:13mOhm, max:15.8mOhm
Idsm(TA=25)=12A, Idsm(TA=70)=10.5A

Choke: 7x7x3
Rdc=8mohm(Typ), 11mohm(Max)

Switching Frequency: 285kHz
Ipeak=9.2A
Iocp~11.4A
OVP: 110%~120%
VFB=0.75V, Vout=1.515V

Security Classification	Compal Secret Data		
Issued Date	2014/10/20	Deciphered Date	2016/10/20

THIS SHEET OF ENGINEERING DRAWING IS THE PROPRIETARY PROPERTY OF COMPAL ELECTRONICS, INC. AND CONTAINS CONFIDENTIAL AND TRADE SECRET INFORMATION. THIS SHEET MAY NOT BE TRANSFERED FROM THE CUSTODY OF THE COMPETENT DIVISION OF R&D DEPARTMENT EXCEPT AS AUTHORIZED BY COMPAL ELECTRONICS, INC. NEITHER THIS SHEET NOR THE INFORMATION IT CONTAINS MAY BE USED BY OR DISCLOSED TO ANY THIRD PARTY WITHOUT PRIOR WRITTEN CONSENT OF COMPAL ELECTRONICS, INC.

Compal Electronics, Inc.

Title: +1.5VP/+0.75VSP

Size: Custom | Document Number: A4W1E | Rev: 0.1

Date: Wednesday, March 04, 2015 | Sheet 29 of 34

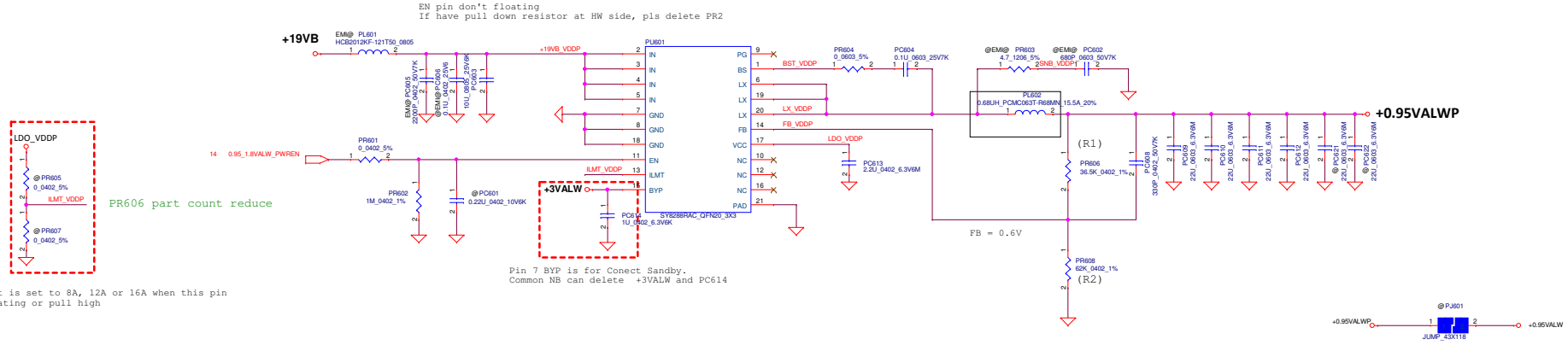

TDC 8A

VFB=0.6V

Vout1=0.6V* (1+R1/R2)=1.062V

Vout2=0.6V*(1+R1/(R2+R3))=0.96V

VDDP_ALW_VCTRL	VDDPALW
1	1.062V
0	0.96V

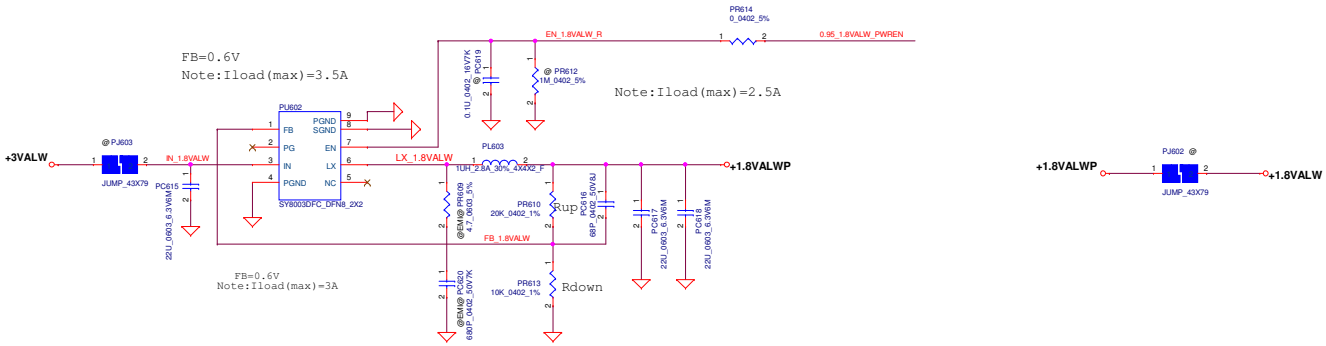

Note:
When design Vin=5V, please stuff snubber to prevent Vin damage

Vout=0.6V* (1+Rup/Rdown)

Security Classification	Compal Secret Data		
Issued Date	2014/10/20	Deciphered Date	2016/10/20

THIS SHEET OF ENGINEERING DRAWING IS THE PROPRIETARY PROPERTY OF COMPAL ELECTRONICS, INC. AND CONTAINS CONFIDENTIAL AND TRADE SECRET INFORMATION. THIS SHEET MAY NOT BE TRANSFERED FROM THE CUSTODY OF THE COMPETENT DIVISION OF R&D DEPARTMENT EXCEPT AS AUTHORIZED BY COMPAL ELECTRONICS, INC. NEITHER THIS SHEET NOR THE INFORMATION IT CONTAINS MAY BE USED BY OR DISCLOSED TO ANY THIRD PARTY WITHOUT PRIOR WRITTEN CONSENT OF COMPAL ELECTRONICS, INC.

Compal Electronics, Inc.

Title: +0.95VALW/+1.8VALW

Size: Custom | Document Number: A4W1E | Rev: 0.1

Date: Wednesday, March 04, 2015 | Sheet 30 of 34

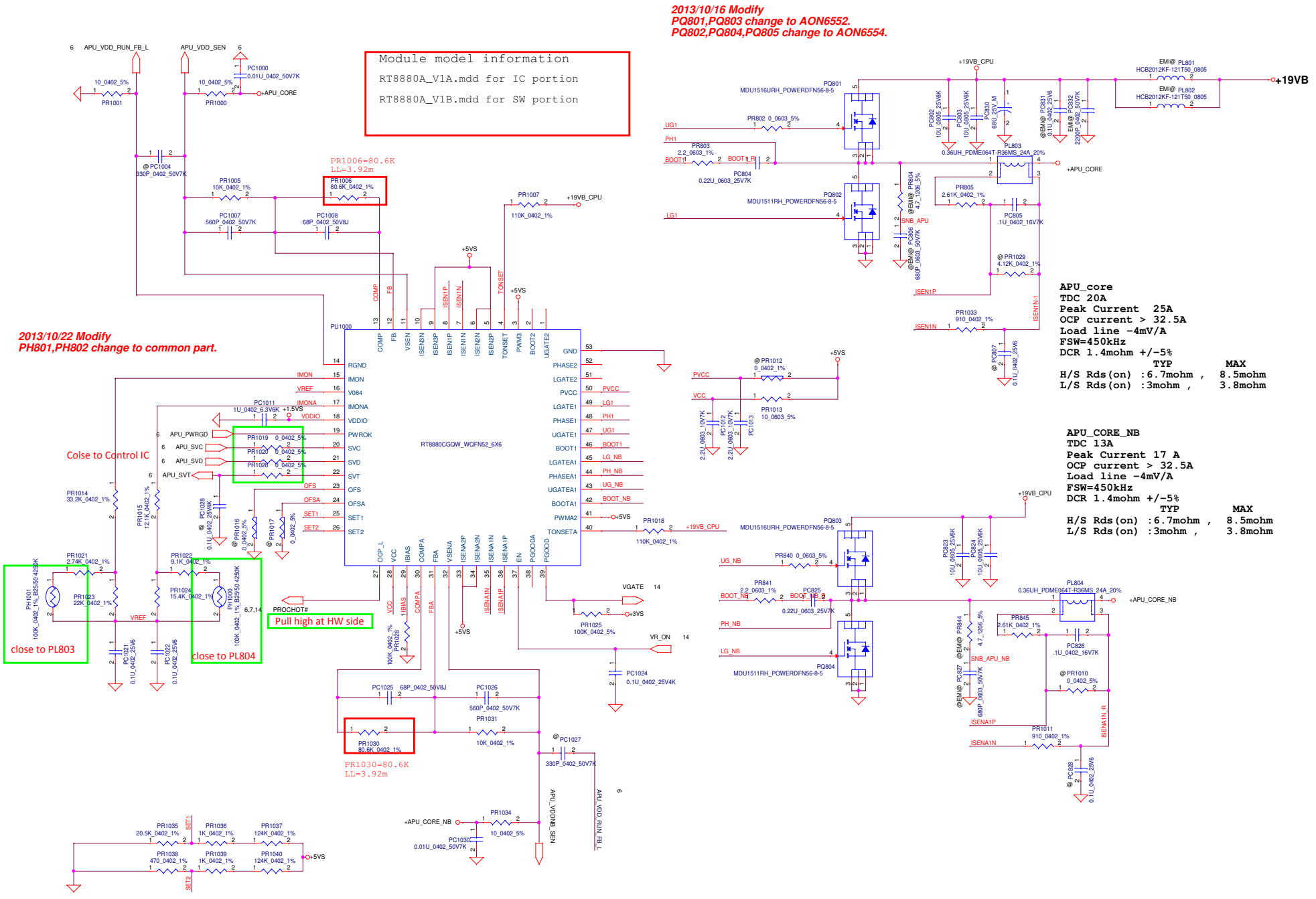

Delete PR834.PR835.PR836.PR839.PR840.PR841,
follow vender FAE suggest.
2013/11/29 modify.

Security Classification	Compal Secret Data			Compal Electronics, Inc.
Issued Date	2012/06/19	Deciphered Date	2012/07/31	Title: CPU_CORE
				Size: Custom; Document Number: A4W1E; Rev: 1A
				Date: Wednesday, March 04, 2015; Sheet 31 of 34

THIS SHEET OF ENGINEERING DRAWING IS THE PROPRIETARY PROPERTY OF COMPAL ELECTRONICS, INC. AND CONTAINS CONFIDENTIAL AND TRADE SECRET INFORMATION. THIS SHEET MAY NOT BE TRANSFERED FROM THE CUSTODY OF THE COMPETENT DIVISION OF R&D DEPARTMENT EXCEPT AS AUTHORIZED BY COMPAL ELECTRONICS, INC. NEITHER THIS SHEET NOR THE INFORMATION IT CONTAINS MAY BE USED BY OR DISCLOSED TO ANY THIRD PARTY WITHOUT PRIOR WRITTEN CONSENT OF COMPAL ELECTRONICS, INC.

+APU_CORE (36.4)

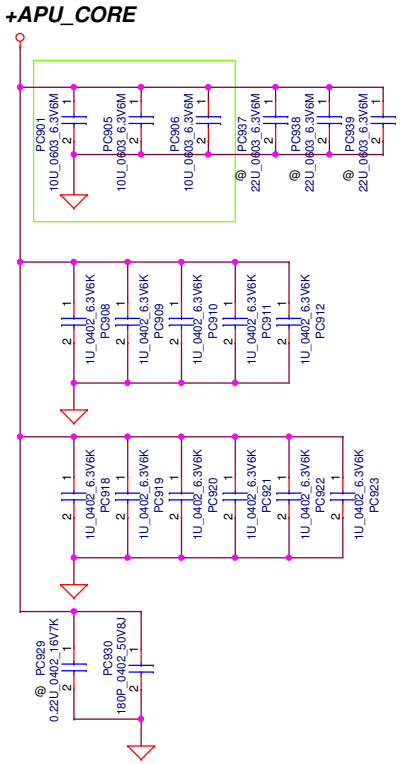

+APU_CORE_NB (36.5)

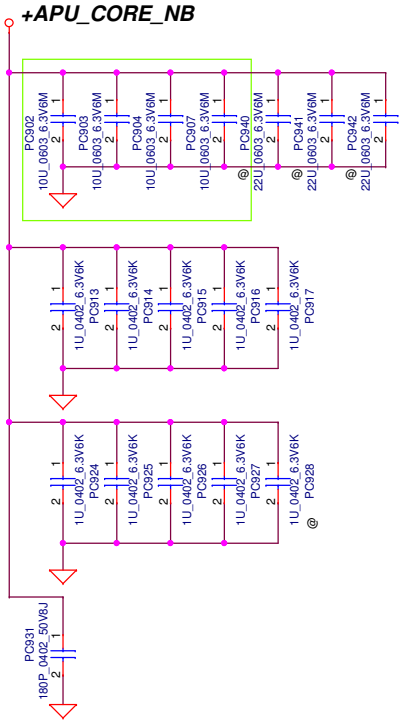

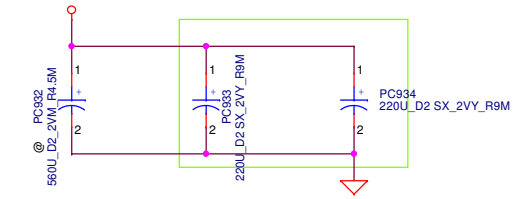

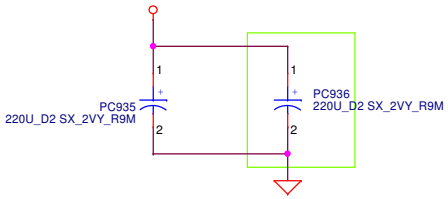

Security Classification	Compal Secret Data		
Issued Date	2014/10/20	Deciphered Date	2016/10/20

THIS SHEET OF ENGINEERING DRAWING IS THE PROPRIETARY PROPERTY OF COMPAL ELECTRONICS, INC. AND CONTAINS CONFIDENTIAL AND TRADE SECRET INFORMATION. THIS SHEET MAY NOT BE TRANSFERED FROM THE CUSTODY OF THE COMPETENT DIVISION OF R&D DEPARTMENT EXCEPT AS AUTHORIZED BY COMPAL ELECTRONICS, INC. NEITHER THIS SHEET NOR THE INFORMATION IT CONTAINS MAY BE USED BY OR DISCLOSED TO ANY THIRD PARTY WITHOUT PRIOR WRITTEN CONSENT OF COMPAL ELECTRONICS, INC.

Compal Electronics, Inc.

Title: +APU_CORE Cap

Size: Custom | Document Number: A4W1E | Rev: 0.1

Date: Wednesday, March 04, 2015 | Sheet 32 of 34

Version change list (P.I.R. List)

Item	Fixed Issue	Reason for change	Rev.	PG#	Modify List	Date	Phase
01	Design Change.	Design Change for CPU control IC to RT8880	02	31	Design change APU_CORE/APU_CORE_NB circuit		
02	Design Change.		02	31	PQ801 and PQ803 change to MDU1516		
03	Design Change.		02	31	PQ802 and PQ804 change to MDU1511		
04	Design Change.		02	27	PQ305 change to MDV1528		
05	Design Change.		02	27	PQ306 change to MDV1527		
06	Design Change.		02	29	PQ501 change to MDV1528		
07							
08							

THIS SHEET OF ENGINEERING DRAWING IS THE PROPRIETARY PROPERTY OF COMPAL ELECTRONICS, INC. AND CONTAINS CONFIDENTIAL AND TRADE SECRET INFORMATION. THIS SHEET MAY NOT BE TRANSFERED FROM THE CUSTODY OF THE COMPETENT DIVISION OF R&D DEPARTMENT EXCEPT AS AUTHORIZED BY COMPAL ELECTRONICS, INC. NEITHER THIS SHEET NOR THE INFORMATION IT CONTAINS MAY BE USED BY OR DISCLOSED TO ANY THIRD PARTY WITHOUT PRIOR WRITTEN CONSENT OF COMPAL ELECTRONICS, INC.

Item	Page	Date	Reason for change	Modify Item	Phase
01	06	2015/01/05	For AMD Beema and Kabini APU colay	R117, R118 change to non-short 0 ohm resistor for Beema and Kabini APU colay	DVT
02	14	2015/01/05	Board ID update from 0 to 1	R1564 change to 12K ohm	
03	19	2015/01/05	HDD connector too close to speaker	Add HDD connector & colay circuit	
04	07	2015/01/12	Power leakage when S3/S4/S5	Change strap pin "LPC_FRAME#" & "LPC_CLK1" pull up power rail to +3VS	
05	13	2015/01/19	HDMI test	Stuff R618,R898	
06	14	2015/01/19	For AMD Beema and Kabini APU colay	Reserve GPIO pin detect for Kabini & Beema APU	
07	21	2015/01/23	Layout PCB footprint correct	Correct LED1, LED2 symbol & update circuit	
08	11	2015/01/27	BOM update for DDR 1.5V power	Unstuff C644	
09	12,20	2015/01/27	BOM update as source request (SM070003K00->X1)	L27,L29,L49,L50,L51 change from SM070003K00/S COM FI_ CHILISIN CMMI21T-900Y-N to SM070003Y00/S COM FI_ MURATA DLW21HN900HQ2L	
10	17	2015/01/27	PC Beep issue on DOS mode	R2138 & R2140 change from 43k to 27k	
11	21,22	2015/01/27	BOM update to Main source	Q17 & Q87 change from SB00000PU00/S TR L2N7002LT1G 1N SOT23-3 to SB00000EN00/S TR 2N7002K 1N SOT23-3 PANJIT	
12	14	2015/01/27	BOM update to Main source	D22 change from SCS00000Z00/S SCH DIO RB751V-40 SOD-323 to SCS00003500/S SCH DIO RB751V-40 SOD-323 YEASHIN	
13	18	2015/01/27	BOM structure update for BYOC/NBYOC	R212 -> NBYOC@, U2606->BYOC@.	
14	19	2015/01/27	BOM structure update for BYOC/NBYOC	R211, R3930->NBYOC@, U66->BYOC@	
15	14	2015/02/25	Board ID update from 1 to 2	R1564 change to 15K ohm	PVT
16	22	2015/02/25	Debug convenience	RP20 change form 2.2k RP to 2.2k resistors	
17	18	2015/02/25	Intel WLAN module request(pin 32 & 46 disconnect)	R872, R873 change to non-short 0 ohm resistor, JNGFF1.46 connect to EC_RX	
18	18	2015/02/25	Remove un-used net from WLAN	Remove R3876 and C85, reserve test point to JNGFF1.42	
19	08	2015/02/25	48MHz crystal tolerance fine tune	C795 change from 6.8pF to 5.6pF	
20	07	2015/02/25	To identify project(14" & 15")	R668 reserve pull high to +3VALW at GEVENT4#(default pull down)	
21	07	2015/02/25	To identify platform(Beema/Kabini)	APU GPIO49, GPIO51 add pull up 10K ohm resistor	
22	21	2015/02/25	LED brightness test result	Change R1 and R3 to 300 ohm(orange), R2 and R6 to 80.6 ohm(blue)	
23	23	2015/03/01	ME drawing update	Change H17 size form H_3P2 to H_3P3	
24		2015/03/04	Part count request	Change 0 ohm resistor to short pad R124,R125,R467,R470,R471,R472,R1680,R1682,R1690,R2552,R2631,R3923,R3934,R3935,R3879,R427,R428,R563,R564,R567,R568 R662,R663,R664,R665,R666,R671,R673	
25	21	2015/03/10	Unstuff un-used component for PCB R1.0	Unstuff SW3 (ON/OFF BTN)	
26	14	2015/03/30	Board ID update from 2 to 3	R1564 change to 20K ohm	Pre MP
27	04	2015/03/30	PCB part number update to 1A	Change to DA6001E301A/PCB 1FE LA-C801P REV1A M/B	

Security Classification	Compal Secret Data		
Issued Date	2014/03/27	Deciphered Date	2016/03/27

THIS SHEET OF ENGINEERING DRAWING IS THE PROPRIETARY PROPERTY OF COMPAL ELECTRONICS, INC. AND CONTAINS CONFIDENTIAL AND TRADE SECRET INFORMATION. THIS SHEET MAY NOT BE TRANSFERED FROM THE CUSTODY OF THE COMPETENT DIVISION OF R&D DEPARTMENT EXCEPT AS AUTHORIZED BY COMPAL ELECTRONICS, INC. NEITHER THIS SHEET NOR THE INFORMATION IT CONTAINS MAY BE USED BY OR DISCLOSED TO ANY THIRD PARTY WITHOUT PRIOR WRITTEN CONSENT OF COMPAL ELECTRONICS, INC.

Compal Electronics, Inc.

Title: HW-PIR

Size: C | Document Number: Z5WAE LA-B232P | Rev: 1.0

Date: Monday, March 30, 2015 | Sheet 34 of 34